NEW

CanadianSolar

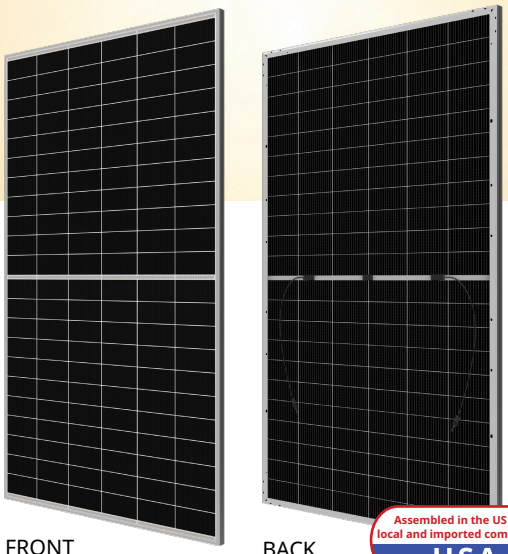

Assembled in the US from local and imported components
USA

TOPBiHiKu6

N-type Bifacial TOPCon Technology

610 W ~ 640 W

CS6.2-66TB-610|615|620|625|630|635|640H

MORE POWER

640 W — Module power up to 640 W
Module efficiency up to 23.7 %

EXTRA POWER — Up to 85% Power Bifaciality, more power from the back side

Excellent anti-LeTID & anti-PID performance. Low power degradation, high energy yield

Lower temperature coefficient (Pmax): -0.29%/°C, increases energy yield in hot climate

Lower LCOE & system cost

MORE RELIABLE

Tested up to ice ball of 35 mm diameter according to IEC 61215 standard

Minimizes micro-crack impacts

Heavy snow load up to 6000 Pa, wind load up to 5400 Pa*

12 Years — **Enhanced Product Warranty on Materials and Workmanship***

30 Years — **Linear Power Performance Warranty***

1st year power degradation no more than 1%
Subsequent annual power degradation no more than 0.4%

*According to the applicable Canadian Solar Limited Warranty Statement.

MANAGEMENT SYSTEM CERTIFICATES*

ISO 9001: 2015 / Quality management system
ISO 14001: 2015 / Standards for environmental management system
ISO 45001: 2018 / International standards for occupational health & safety
IEC 62941: 2019 / Photovoltaic module manufacturing quality system

PRODUCT CERTIFICATES*

IEC 61215 / IEC 61730
UL 61730 / IEC 61701 / IEC 62716

* The specific certificates applicable to different module types and markets will vary, and therefore not all of the certifications listed herein will simultaneously apply to the products you order or use. Please contact your local Canadian Solar sales representative to confirm the specific certificates available for your Product and applicable in the regions in which the products will be used.

Canadian Solar Inc., a BNEF Tier 1 and S&P Global Tier 1 module manufacturer, is a leading provider of integrated solar and energy storage solutions. With over 25 years of expertise, the company has delivered more than 175 GW of premium-quality solar modules worldwide.

* For detailed information, please refer to the Installation Manual.

CS Power Systems Inc.
1350 Treat Blvd. Suite 500, Walnut Creek, CA 94597 | www.canadiansolar.com/na | service.ca@CSPowertech.com

ENGINEERING DRAWING (mm)

Rear View

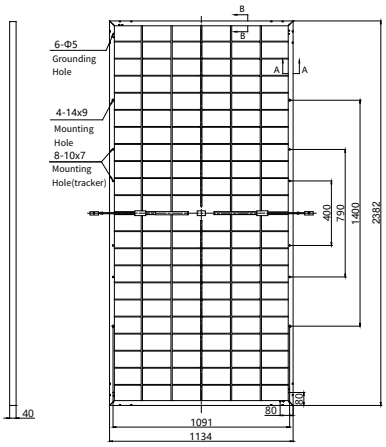

Frame Cross Section

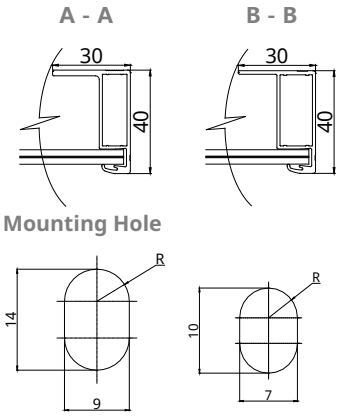

CS6.2-66TB-610H / I-V CURVES

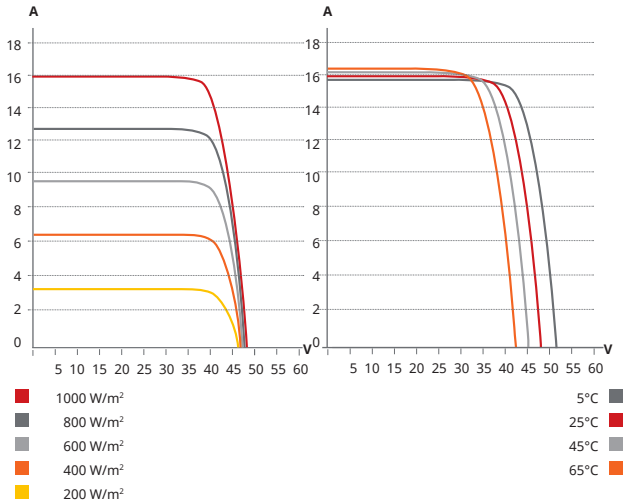

ELECTRICAL DATA (STC*) | CS6.2-66TB-xxxH (xxx=610-640)

		Nominal Max. Power (Pmax)	Opt. Operating Voltage (Vmp)	Opt. Operating Current (Imp)	Open Circuit Voltage (Voc)	Short Circuit Current (Isc)	Module Efficiency
610		610 W	40.8 V	14.96 A	48.0 V	15.97 A	22.6%
Bifacial Gain**	5%	641 W	40.8 V	15.71 A	48.0 V	16.77 A	23.7%
	10%	671 W	40.8 V	16.46 A	48.0 V	17.57 A	24.8%
	20%	732 W	40.8 V	17.95 A	48.0 V	19.16 A	27.1%
615		615 W	41.0 V	15.01 A	48.2 V	16.02 A	22.8%
Bifacial Gain**	5%	646 W	41.0 V	15.76 A	48.2 V	16.82 A	23.9%
	10%	677 W	41.0 V	16.51 A	48.2 V	17.62 A	25.1%
	20%	738 W	41.0 V	18.01 A	48.2 V	19.22 A	27.3%
620		620 W	41.2 V	15.06 A	48.4 V	16.08 A	23.0%
Bifacial Gain**	5%	651 W	41.2 V	15.81 A	48.4 V	16.88 A	24.1%
	10%	682 W	41.2 V	16.57 A	48.4 V	17.69 A	25.2%
	20%	744 W	41.2 V	18.07 A	48.4 V	19.30 A	27.5%
625		625 W	41.4 V	15.11 A	48.6 V	16.14 A	23.1%
Bifacial Gain**	5%	656 W	41.4 V	15.87 A	48.6 V	16.95 A	24.3%
	10%	688 W	41.4 V	16.62 A	48.6 V	17.75 A	25.5%
	20%	750 W	41.4 V	18.13 A	48.6 V	19.37 A	27.8%
630		630 W	41.6 V	15.16 A	48.8 V	16.20 A	23.3%
Bifacial Gain**	5%	662 W	41.6 V	15.92 A	48.8 V	17.01 A	24.5%
	10%	693 W	41.6 V	16.68 A	48.8 V	17.82 A	25.7%
	20%	756 W	41.6 V	18.19 A	48.8 V	19.44 A	28.0%
635		635 W	41.9 V	15.18 A	49.4 V	16.22 A	23.5%
Bifacial Gain**	5%	667 W	41.9 V	15.94 A	49.4 V	17.03 A	24.7%
	10%	699 W	41.9 V	16.70 A	49.4 V	17.84 A	25.9%
	20%	762 W	41.9 V	18.22 A	49.4 V	19.46 A	28.2%
640		640 W	42.1 V	15.23 A	49.7 V	16.24 A	23.7%
Bifacial Gain**	5%	672 W	42.1 V	15.99 A	49.7 V	17.05 A	24.9%
	10%	704 W	42.1 V	16.75 A	49.7 V	17.86 A	26.1%
	20%	768 W	42.1 V	18.28 A	49.7 V	19.49 A	28.4%

* Under Standard Test Conditions (STC) of irradiance of 1000 W/m², spectrum AM 1.5 and cell temperature of 25°C.
** Bifacial Gain: The additional gain from the back side compared to the power of the front side at the standard test condition. It depends on mounting (structure, height, tilt angle etc.) and albedo of the ground.

ELECTRICAL DATA (NMOT*) | CS6.2-66TB-xxxH (xxx=610-640)

	Nominal Max. Power (Pmax)	Opt. Operating Voltage (Vmp)	Opt. Operating Current (Imp)	Open Circuit Voltage (Voc)	Short Circuit Current (Isc)
610	461 W	38.6 V	11.96 A	45.4 V	12.87 A
615	465 W	38.8 V	12.00 A	45.6 V	12.91 A
620	469 W	38.9 V	12.04 A	45.8 V	12.96 A
625	473 W	39.1 V	12.08 A	46.0 V	13.00 A
630	477 W	39.3 V	12.12 A	46.2 V	13.05 A
635	480 W	39.6 V	12.12 A	46.8 V	13.08 A
640	484 W	39.8 V	12.16 A	47.1 V	13.10 A

* Under Nominal Module Operating Temperature (NMOT), irradiance of 800 W/m², spectrum AM 1.5, ambient temperature 20°C, wind speed 1 m/s.

MECHANICAL DATA

Specification	Data
Cell Type	TOPCon cells
Cell Arrangement	132 [2 x (11 x 6)]
Dimensions	2382 × 1134 × 40 mm (93.8 × 44.6 × 1.57 in)
Weight	33.4 kg (73.6 lbs)
Front Glass	2.0 mm heat strengthened glass with anti-reflective coating
Back Glass	2.0 mm heat strengthened glass
Frame	Anodized aluminium alloy
J-Box	IP68, 3 bypass diodes
Cable	4.0 mm² (IEC), 12 AWG (UL)
Cable Length (Including Connector)	300 mm (11.8 in) (+) / 200 mm (7.9 in) (-)*
Connector	T6 or MC4-EVO2 or MC4-EVO2A
Per Pallet	27 pieces
Per 53' Truck	540 pieces

* For detailed information, please contact your local Canadian Solar sales and technical representatives.

ELECTRICAL DATA

Operating Temperature	-40°C ~ +85°C
Max. System Voltage	1500 V (IEC/UL)
Module Fire Performance	TYPE 29 (UL 61730) or CLASS C (IEC61730)
Max. Series Fuse Rating	35 A
Protection Class	Class II
Power Tolerance	0 ~ + 10 W
Power Bifaciality*	80 %

* Power Bifaciality = $Pmax_{rear}$ / $Pmax_{front}$, both $Pmax_{rear}$ and $Pmax_{front}$ are tested under STC, Bifaciality Tolerance: ± 5 %

TEMPERATURE CHARACTERISTICS

Specification	Data
Temperature Coefficient (Pmax)	-0.29 % / °C
Temperature Coefficient (Voc)	-0.25 % / °C
Temperature Coefficient (Isc)	0.045 % / °C
Nominal Module Operating Temperature	41 ± 3°C

* The specifications and key features contained in this datasheet may deviate slightly from our actual products due to the on-going innovation and product enhancement. Canadian Solar Inc. reserves the right to make necessary adjustment to the information described herein at any time without further notice.
Please be kindly advised that PV modules should be handled and installed by qualified people who have professional skills and please carefully read the safety and installation instructions before using our PV modules.

PARTNER SECTION

CS Power Systems Inc.
1350 Treat Blvd. Suite 500, Walnut Creek, CA 94597 | www.canadiansolar.com/na | service.ca@CSPowertech.com

October 2026. All rights reserved, PV Module Product Datasheet V1.1_F68_L4A_610-640_TX (DC Light)