CanadianSolar

INSTALLATION MANUAL OF BIFACIAL MODULE

For professional use only

1.0 GENERAL INFORMATION |3

1.1 INSTALLATION MANUAL DISCLAIMER |3

1.2 LIMITATION OF LIABILITY |3

2.0 SAFETY PRECAUTIONS |3

3.0 MECHANICAL / ELECTRICAL SPECIFICATIONS |4

4.0 UNPACKING AND STORAGE |5

5.0 MODULE INSTALLATION |6

5.1 MODULE WIRING |7

5.2 GROUNDING |10

6.0 MOUNTING INSTRUCTIONS |11

6.1 MOUNTING METHODS FOR FRAMELESS BIFACIAL MODULE (CLAMPING) |12

6.2MOUNTING METHODS FOR FRAMELESS BIFACIAL MODULE (SINGLE-AXIS TRACKERS) |14

6.3 MOUNTING METHODS FOR FRAMED BIFACIAL MODULE (BOLTING) |15

6.4 MOUNTING METHODS FOR FRAMED BIFACIAL MODULE (CLAMPING) |17

6.5 MOUNTING METHODS FOR FRAMED BIFACIAL MODULE (SINGLE-AXIS TRACKER) |18

7.0 MAINTENANCE |24

AMENDED EDITIONS AND DATES |24

ANNEX A: MECHANICAL AND ELECTRICAL RATINGS |25

ANNEX B: ALTERNATIVE GROUNDING METHODS |28

ANNEX C: MODULE CLEANING GUIDELINES |28

EN-Rev IM/GN-BM-EN/1.3 Copyright © September 2019. Canadian Solar Inc.

1.0 GENERAL INFORMATION

This general manual provides important safety information relating to the installation, maintenance and handling of bifacial double glass solar modules (BiKu and BiHiKu series). Professional installer must read these guidelines carefully and strictly follow these instructions. Failure to follow these instructions may result in death, injury or property damage. The installation and handling of PV modules requires professional skills and should only be performed by qualified professionals. Installers must inform end -users (consumers) about the aforesaid information accordingly.

The word “module” or “PV module” used in this manual refers to one or more double glass solar modules. This manual is only valid for the bifacial double glass module types CS3W-PB-AG, CS3U-MB-FG, CS3K-MB-FG, CS3U-MB-AG, CS3K-MB-AG, CS3U-PB-FG, CS3K-PB-FG, CS3U-PB-AG and CS3K-PB-AG. Please retain this manual for future reference.

We recommend visiting www.canadiansolar.com regularly for the most updated version of bifacial module installation manual.

1.1 INSTALLATION MANUAL DISCLAIMER

The information contained in this manual is subject to change by Canadian Solar Inc. without prior notice. Canadian Solar Inc. gives no warranty of any kind whatsoever, either explicitly or implicitly, with respect to the information contained herein.

In the event of any inconsistency among different language versions of this document, the English version shall prevail. Please refer to our product lists and documents published on our website at: http://www.canadiansolar.com as these lists are updated on a regular basis.

1.2 LIMITATION OF LIABILITY

Canadian Solar Inc. shall not be held responsible for damages of any kind, including– without limitation – bodily harm, injury or damage to property, in connection with handling PV modules, system installation, or compliance or non-compliance with the instructions set forth in this manual.

2.0 SAFETY PRECAUTIONS

Warning: Before attempting to install, wire, operate and/or service the module and other electrical equipment, all instructions should be read and understood. PV module connectors pass direct current (DC) when exposed to sunlight or other light sources. Contact with electrically active parts of the module, such as terminals, can result in injury or death, irrespective of whether or not the module and the other electrical equipment have been connected.

Avertissement: Toutes les instructions devront être lues et comprises avant de procéder à l’installation, le câblage, l’exploitation et/ou l’entretien des panneaux. Les interconnexions des panneaux conduisent du courant continu (CC) lorsque le panneau est exposé à la lumière du soleil ou à d’autres sources lumineuses. Tout contact avec des éléments sous tension du panneau tels que ses bornes de sortie peut entraîner des blessures ou la mort, que le panneau soit connecté ou non.

GENERAL SAFETY

- All Modules must be installed by licensed electricians in accordance with the applicable electrical codes such as, the latest National Electrical Code (USA) or Canadian Electric Code (Canada) or other national or international electrical codes.

Protective clothing (non-slip gloves, clothes, etc.) must be worn during installation to prevent direct contact with 30 V_{DC} or greater, and to protect hands from sharp edges.

Prior to installation, remove all metallic jewelry to prevent accidental exposure to live circuits.

When installing modules in light rain, morning dew, take appropriate measures to prevent water ingress into the connectors, f. e. using connector endcaps.

Do not allow children or unauthorized persons near the installation site or module storage area.

- Use electrically insulated tools to reduce the risk of electric shock.

- If the disconnects and over current protective devices (OCPD) cannot be opened or the inverter cannot be powered down, cover the fronts and backs of modules in

the PV array with an opaque material to stop the production of electricity when installing or working on a module or wiring.

- **Do not** install modules in strong wind.
- **Do not** use or install broken modules.
- **Do not** contact module surface if the front or rear glass is broken. This may cause electric shock.
- **Do not** open the cover of the junction box at any time.
- **Do not** attempt to repair any part of the PV module. The module does not contain any serviceable parts.
- **Do not** disassemble a module or remove any module part.
- **Do not** artificially concentrate sunlight on a module.
- **Do not** connect or disconnect modules when current from the modules or an external source is present.

3.0 MECHANICAL / ELECTRICAL SPECIFICATIONS

Module electrical ratings are measured under Standard Test Conditions (STC) of 1000 W/m2 irradiance, with an AM 1.5 spectrum, and a cell temperature of 25°C. Detailed electrical and mechanical characteristics of Canadian Solar Inc. crystalline silicon PV modules can be found in Annex A (Mechanical And Electrical Ratings) of this Installation Manual. Main electrical characteristics under STC are also stated on each module label. Please refer to the datasheet or the product nameplate for the maximum system voltage.

Under certain conditions, a module may produce more current or voltage than its Standard Test Conditions rated power. For Bifacial modules particularly, the operating current is related to specific system mounting and design conditions, and will vary under different module mounting height and albedo of ground surface. As a result, correction factors should be applied to the module short-circuit current and the open-circuit voltage under STC, when determining component ratings and capacities.

For open-circuit voltage, the most conservative correction factors presented in Table 1 below generally applies, as requested in NEC: 2017 code:

TABLE 1: LOW TEMPERATURE CORRECTION FACTORS FOR OPEN-CIRCUIT VOLTAGE

Lowest Expected Ambient Temperature (°C/°F)	Correction Factor
24 to 20 / 76 to 68	1.02
19 to 15 / 67 to 59	1.04
14 to 10 / 58 to 50	1.06
9 to 5 / 49 to 41	1.08
4 to 0 / 40 to 32	1.10
-1 to -5 / 31 to 23	1.12
-6 to -10 / 22 to 14	1.14
-11 to -15 / 13 to 5	1.16
-16 to -20 / 4 to -4	1.18
-21 to -25 / -5 to -13	1.20
-26 to -30 / -14 to -22	1.21
-31 to -35 / -23 to -31	1.23
-36 to -40 / -32 to -40	1.25

Alternatively, a more accurate correction factor for the open-circuit voltage can be calculated using the following formula:

$$C_{VOC} = 1-\alpha_{Voc} \times (25 - T)$$

T (°C) is the lowest expected ambient temperature at the system installation site

α_{Voc} (%/°C) is the voltage temperature coefficient of the selected module (refer to corresponding datasheet)

OCPD rating selection should be done per the following guidance, where the minimum OCPD rating possible is determined by calculating the expected maximum circuit current for the PV system, and the maximum OCPD rating constrained by the IEC 61215: 2016 and UL 1703: 2018 standard requirements for the certified PV modules.

Minimum string fuse rating < X ≤ Maximum string fuse rating

The maximum string fuse ratings can be found in ANNEX A: Mechanical And Electrical Ratings for all the certified Canadian Solar bifacial module types.

The minimum string fuse rating for compliance with NEC: 2017 code and IEC62548: 2016 requirement is suggested to be determined as follows:

Minimum string fuse rating = IscSTC x 1.25 x Max (1.175, Imppα ÷ ImppSTC)

Imppα = the highest 3-hour current average resulting from the simulated local simultaneous irradiances on

 Copyright © September 2019. Canadian Solar Inc.

the front and rear sides of the PV array accounting for elevation and orientation

IscSTC = the listed short circuit current at 0% bifacial gain on the PV module datasheet or nameplate label

ImppSTC = the listed MPP operating current at 0% bifacial gain on the PV module datasheet or nameplate label

An assembly, together with its overcurrent device (s), that is listed for continuous operation at 100 percent of its rating shall be permitted to be used at 100 percent of its rating, and therefore shall not require the additional 1.25 multiplier

Appropriate correction factors should be selected by licensed professional electrical engineers according to relevant design codes and system simulation results. Canadian Solar does not take responsibility for the determination of the minimum series fuse rating.

4.0 UNPACKING AND STORAGE

NOTICE

PRECAUTIONS

- Modules should be stored in a dry and ventilated environment to avoid direct sunlight and moisture. If modules are stored in an uncontrolled environment, the storage time should be less than 3 months and extra precautions should be taken to prevent connectors from being exposed to moisture or sunlight, like using connector endcaps. Specific T4 connector endcaps are available upon request.

- Unpack module pallets carefully, following the steps shown on the pallet. Unpack, transport and store the modules with care.

- Modules must always be unpacked and installed by two people. Always use both hands when handling modules.

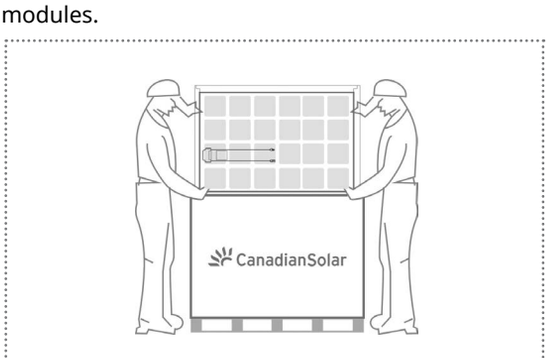

- **Do not** lift modules by their wires or junction box.

- **Do not** stack the frameless and framed modules.

- **Do not** place excessive loads on the module or twist the module.

- **Do not** stand, step, walk and/or jump on modules under any circumstances. Localized heavy loads may cause severe micro-cracks at cell level, which in turn may compromise module reliability and void Canadian Solar Inc's warranty.

- **Do not** carry modules on your head.

- **Do no**t drop or place objects (such as tools) on the modules.

- **Do not** use sharp instruments on the modules.

- **Do not** leave modules unsupported or unsecured.

- **Do not** change the wiring of bsypass diodes.

- Keep all connectors clean and dry at all times.

- **Do not** expose the modules and its connectors to any unauthorized chemical substance (e.g. oil, lubricant, pesticide, etc.).

PRODUCT IDENTIFICATION

- Each module has two identical barcodes (one in the laminate under the front glass, the second on the rear side of the module) that act as a unique identifier. Each module has a unique serial number containing 14 digits.

- A nameplate is also affixed to the rear glass of each module. This nameplate specifies the model type, as well as the main electrical and safety characteristics of the module.

5.0 MODULE INSTALLATION

PRECAUTIONARY MEASURES AND GENERAL SAFETY

- Prior to installing modules please obtain information about any requirements and necessary approvals for the site, installation and inspection from the relevant authorities.

- Check applicable building codes to ensure that the construction or structure (roof, facade, support, etc.) can bear the module system load.

- Canadian Solar Inc. bifacial double glass solar modules (BiKu and BiHiKu) have been qualified for Application Class A (equivalent to Safety Class II requirements). Modules rated under this class should be used in systems operating at voltage above 50V or power above 240W, where general contact access is anticipated.

- Canadian Solar Inc. bifacial double glass modules have been certified as Type 3 or Type 13 according to UL 1703 and as Class A for fire performance according to IEC 61730-2, please refer to the datasheet or the product nameplate for the detailed types.

- Consult your local authority for guidelines and requirements for building or structural fire safety.

UL 1703 SYSTEM FIRE RATING REQUIREMENTS

- The fire rating of this module is only valid when the product is installed as specified in the mechanical mounting instructions.

- When installing the modules, ensure the assembly is mounted over a fire resistant roof covering rated for the application.

- A photovoltaic system composed of UL1703 certified modules mounted on a UL2703 certified mounting system should be evaluated in combination with roof coverings in accordance with UL1703 standard, with respect to meeting the same fire classification as the roof assembly.

- Mounting systems with a System Fire Class Rating (Class A, B or C), tested in conjunction with fire rated “Type 3” or “Type 13” rated modules, are considered acceptable for use with Canadian Solar Inc. modules, provided the mounting system does not violate any other requirement of this manual.

- Any mounting system limitation on inclination or accessory required to maintain a specific System Fire Class Rating should be clearly specified in the installation instructions and UL2703 certification of the mounting system supplier.

ENVIRONMENTAL CONDITIONS

- The module is intended for use in general open-air climates, as defined in IEC 60721-2-1: Classification of environmental conditions Part 2-1: Environmental conditions appearing in nature - temperature and humidity.

- Please consult the Canadian Solar Inc. technical support department for more information on the use of modules in special climates, such as an altitude greater than 2000 m, heavy snow, severe hail storm, hurricane etc.

- Do not install modules near open flames or flammable materials.

- Do not immerse modules in water or constantly expose modules to water (either fresh or salt) (i.e. from fountains, sea spray).

- Exposing modules to salt (i.e. marine environments) or sulfur (i.e. sulfur sources, volcanoes) incurs the risk of module corrosion.

- Do not expose modules and their connectors to any unauthorized chemical substances (e.g. oil, lubricant, pesticide, etc.), as modules may incur damages.

- Failure to comply with these instructions will void Canadian Solar Inc. warranty.

INSTALLATION REQUIREMENTS

- Ensure that the module meets the general technical system requirements.

- Ensure that other systems components do not damage modules mechanically or electrically.

- Modules can be wired in series to increase voltage or in parallel to increase current. To connect modules in series, connect the positive terminal of one module to the negative terminal of the next module. To connect in parallel, connect the positive terminal of one module to the positive terminal of the next module.

- Only connect the quantity of modules that corresponds to the voltage specifications of the inverters used in the system. In addition modules must NOT be connected together to create a voltage higher than the maximum

EN-Rev IM/GN-BM-EN/1.3 Copyright © September 2019. Canadian Solar Inc.

permitted system voltage stated on the module nameplate, even under the worst local temperature conditions (see Table 1 for the correction coefficients that apply to open-circuit voltage).

- A maximum of two strings can be connected in parallel without using an over-current protection device (fuses, etc.) incorporated in series within each string. Three or more strings can be connected in parallel if an appropriate and certified over-current protection device is installed in series with each string.

- Only modules with similar electrical parameters should be connected in the same string to avoid or minimize mismatch effects in arrays.

- To minimize risk in the event of an indirect lightning strike, avoid forming loops with the wiring when designing the system.

- The recommended maximum series fuse rating is stated in table 1 in the Annex A.

- Modules should be safely fixed to bear all expected loads, including wind and snow loads.

- After the installation of double glass modules, a maximum 40 mm deflection for frameless module, and a 30 mm deflection for framed module is allowed.

- For frameless modules, a minimum clearance of 10 mm (0.394 in) or more between modules is required to allow the thermal expansion of the modules. The clearance is measured from one plastic corner protector to the adjacent plastic corner protector.

- For framed modules, a minimum clearance of 6.5 mm (0.25 in) between modules is required to allow thermal expansion of the frames and modules.

OPTIMUM ORIENTATION AND TILT

- To maximize the annual yield, please calculate the optimum orientation and tilt for PV modules in that specific installation site. The highest yields are achieved when sunlight shines perpendicularly onto the PV modules.

AVOID SHADING

- Even minor partial shading (e.g. from dirt deposits) reduces the yield. A module can be considered to be unshaded if its entire surface is free from shading all year round. Sunlight should be able to reach at least the front side of the module even on the shortest day of the year.

- For optimizing the power generation of the rear side of bifacial modules, obstacles between modules and the mounting ground should be avoided as much as possible.

- Constant shading conditions can affect module service lifetime, due to accelerated ageing of the encapsulation material and thermal stress on the bypass diodes.

RELIABLE VENTILATION

- Bifacial modules use direct, reflected, or diffuse sunlight on the backside to generate additional power. Therefore, bifacial modules are not suggested to be used in building attached photovoltaic systems (BAPV). If BAPV, or similar mounting is still required, sufficient clearance of at least 10 cm (3.94 in) between the module and the mounting surface needs to be provided to allow cooling air to circulate around the back of the module. This also allows condensation or moisture to dissipate.

- According to UL 1703, if any other specific clearance required for maintaining a system fire rating should prevail. Detailed clearance requirements pertaining to system fire ratings must be provided by your racking supplier.

5.1 MODULE WIRING

CORRECT WIRING SCHEME

- Ensure that the wiring is correct before starting up the system. If the measured open circuit voltage (Voc) and short-circuit current (Isc) differ substantially from the specifications, this indicates that there is a wiring fault.

- Do not connect different connectors (brand and model) together.

- When modules have been pre-installed but the system has not been connected to the grid yet, each module string should be kept under open-circuit conditions and proper actions should be taken to avoid dust and moisture penetration inside the connectors.

- For CS3W, CS3U and CS3K series modules, Canadian Solar Inc. offers several cable length options to match various system configurations, which are shown in table 2:

- On below figures, bold lines represent cable installation pathways, while + and - connector correspond to positive and negative module terminals respectively.

- Cables should always be fastened on module frames or mounting rails, in order to avoid shading on module rear side.

- In case where a cable connection method not included in below table is used, please confirm suitable cable length with Canadian Solar's sales representative.

TABLE 2:
SYSTEM CABLE CONFIGURATION FOR CS3U AND CS3K MODULES

Module types	Recommended wiring configurations
CS3U-MB-FG CS3K-MB-FG CS3U-MB-AG CS3K-MB-AG CS3U-PB-FG CS3K-PB-FG CS3U-PB-AG CS3K-PB-AG CS3W-PB-AG	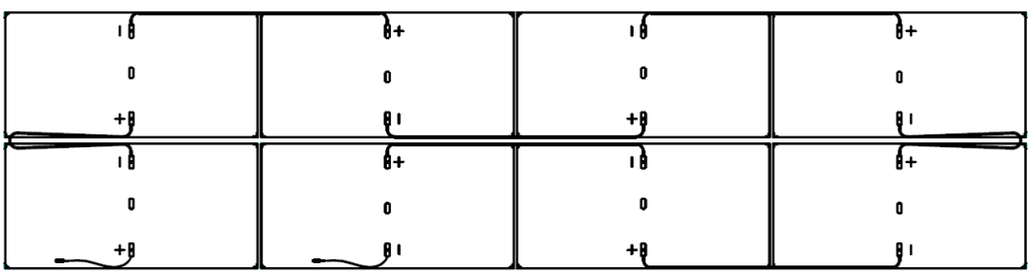
	Landscape installation two rows: CS3U/CS3W Cable length per lead= 1400 mm **CS3K** Cable length per lead=1250 mm **NOTICE** Adjacent modules in the same row need to be rotated 180 degrees for proper installation.
	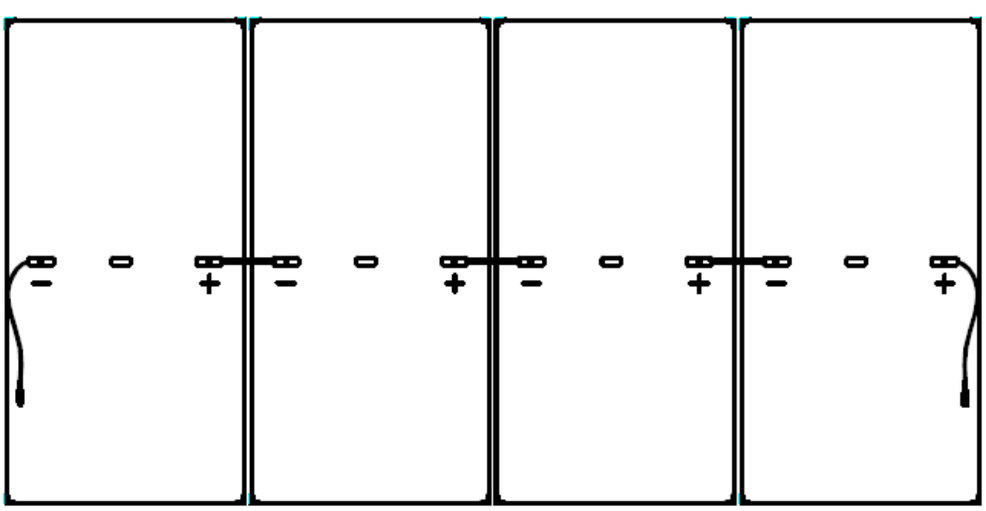
	Portrait installation one row: CS3U/CS3K/CS3W Cable length per lead = 400 mm (+), 280 mm (-)

Module types	Recommended wiring configurations (continued)
CS3U-MB-FG CS3K-MB-FG CS3U-MB-AG CS3K-MB-AG CS3U-PB-FG CS3K-PB-FG CS3U-PB-AG CS3K-PB-AG CS3W-PB-AG	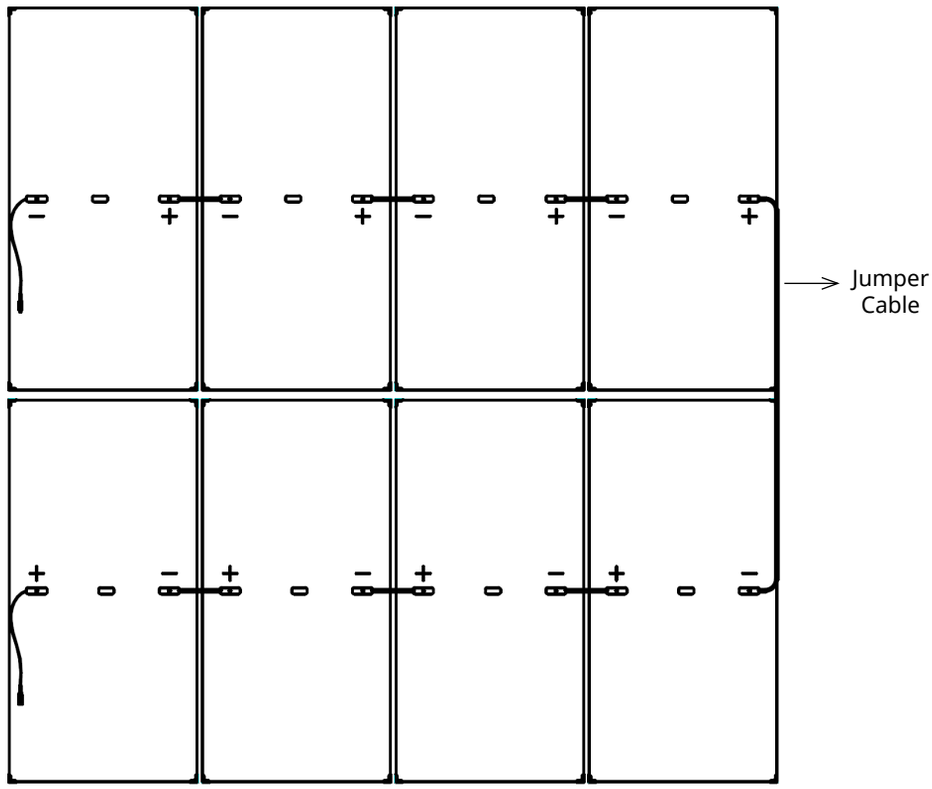
	Portrait installation two rows: **CS3U/CS3W** cable length = 400 mm (+), 280 mm (-) & 1800 mm jumper cable **CS3K** cable length = 400 mm (+), 280 mm(-) &1400 mm jumper cable **NOTICE** Modules in adjacent rows should be rotated 180 degrees for proper installation.
	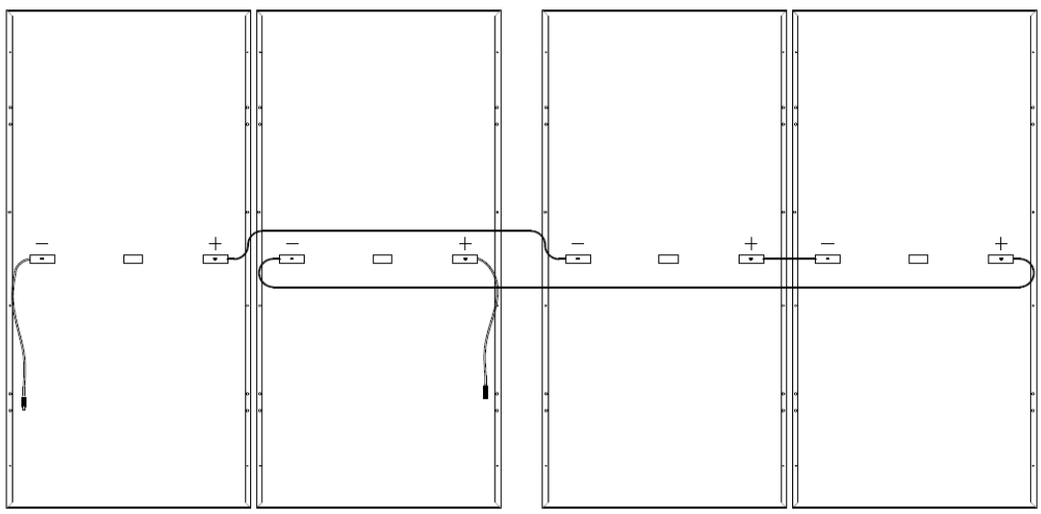
	Portrait installation one row: (Leap-frog for single-axis tracker) **CS3U** Cable length = 1670 mm (+), 1670 mm (-) **CS3W** Cable length = 1850 mm (+), 1850 mm (-)

The maximum distance between two adjacent modules should be within 50 mm (1.96 in) for side with mounting clamps, and within 25 mm (0.98 in) for side without mounting clamps, in order to meet system cable scheme.

CORRECT CONNECTION OF PLUG CONNECTORS

- Make sure that all connections are safe and properly mated. The PV connectors should not be subjected to stress from the exterior. Connectors should only be used to connect the circuit. They should never be used to turn the circuit on and off.

- Connectors are not waterproof when unmated. When installing modules, connectors should be connected to each other as soon as possible or appropriate measures (like using connector endcaps) should be taken to avoid moisture and dust penetrating into the connector.

- Do not clean or precondition the connectors using lubricants or any unauthorized chemical substances.

USE OF SUITABLE MATERIALS

- Only use dedicated solar cable and suitable plugs (wiring should be sheathed in a sunlight-resistant conduit or, if exposed, should itself be sunlight-resistant) that meet local fire, building and electrical regulations. Please ensure that all wiring is in perfect electrical and mechanical condition.

- Installers may only use single-conductor cable listed and labeled as USE-2 or PV wire which is 90°C wet rated in North America, and single conductor cable, 4-16 mm² (5-12 AWG), 90°C wet rated in other areas (i.e. TUV 2PfG1169 or EN50618 approved), with proper insulation which is able to withstand the maximum possible system open-circuit voltage. Only copper conductor material should be used. Select a suitable conductor gauge to minimize voltage drop and ensure that the conductor ampacity complies with local regulations (i.e. NEC 690.8(D)).

CABLE AND CONNECTOR PROTECTION

- Secure the cables to the mounting system using UV-resistant cable ties. Protect exposed cables from damage by taking appropriate precautions (e.g. placing them inside a metallic raceway like EMT conduit). Avoid exposure to direct sunlight.

- A minimum bending radius of 60mm (2.36 in) is required when securing the junction box cables to the racking system.

- Protect exposed connectors from weathering damage by taking appropriate precautions. Avoid exposure to direct sunlight.

- Do not place connectors in locations where water could easily accumulate.

5.2 GROUNDING

- EQUIPMENT GROUNDING: Frameless bifacial double glass modules (CS3U-MB-FG, CS3K-MB-FG) do not present any exposed conductive parts, and therefore do not require to be electrically grounded for compliance to the North American National Electrical Code (NEC).

- For grounding requirements in North America, a module with exposed conductive parts is considered to comply with UL 1703 only when it is electrically grounded in accordance with both the instructions presented below and the requirements of the National Electrical Code. Any grounding means used with Canadian Solar Inc. modules should be NRTL certified to UL 467 and UL 2703 standards. Please consult our technical service team for the formal approval process.

- For grounding requirements in other areas, although the modules are certified to Safety Class II, we recommend them to be grounded and that module installation should comply with all applicable local electrical codes and regulations. Grounding connections should be installed by a qualified electrician. Connect module frames together using adequate grounding cables: we recommend using 4-14 mm² (AWG 6-12) copper wire. Holes provided for this purpose are identified with a grounding symbol ⏚ (IEC61730-1). All conductive connection junctions must be firmly fixed.

- Do not drill any extra ground holes for convenience this will void the modules warranty.

- All bolts, nuts, flat washers, lock washers and other relevant hardware should be made of stainless steel, unless otherwise specified.

- Canadian Solar Inc. does not provide grounding hardware.

- One grounding method is recommended for Canadian Solar Inc. standard modules, as described below. For alternative grounding methods, please refer to Annex B (Alternative Grounding Methods). It is not possible to use standard grounding methods for certain module ranges.

EN-Rev IM/GN-BM-EN/1.3 Copyright © September 2019. Canadian Solar Inc.

GROUNDING METHOD:
BOLT + TOOTHED NUT + CUP WASHER.

1. To fix the wire between the flat washer and cup washer, place the cup washer (concave side up) between the frame and the wire.

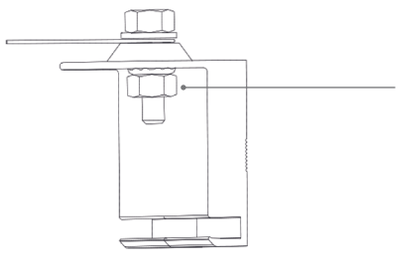

2. Then tighten the bolt using the toothed nut.

- A grounding kit containing an M5 (3/16") SS cap bolt, an M5 (3/16") SS flat washer, an M5 (3/16") SS cup washer, and an M5 (3/16") SS nut (with teeth) should be used to attach copper grounding wire to a pre-drilled grounding hole on the frame (see image above). The grounding holes are located at the upper and lower edges of the long side frame, close to the module short sides.

- Mounting rail designs should be such to allow easy access to the grounding holes located on the long side of the frame, in order to enable the equipment grounding function when required.

- Place the wire between the flat washer and the cup washer. Ensure that the cup washer is positioned between the frame and the wire with the concave side up to prevent galvanic corrosion. Tighten the bolt securely using the SS toothed nut. A wrench may be used to do this. The tightening torque is 3-7 Nm (2.2-5.2 ft-lbs).

6.0 MOUNTING INSTRUCTIONS

The applicable regulations pertaining to work safety, accident prevention and securing the construction site must be observed. Workers and third party personnel shall wear or install fall arrest equipment. Any third party need to be protected against injuries and damages.

- The mounting design must be certified by a registered professional engineer. The mounting design and procedures must comply with local codes and requirements from all relevant authorities.

- Canadian Solar Inc. does not provide mounting hardware.

- The system designer and installer are responsible for load calculations and for proper design of support structure.

- The loads described in this manual correspond to test loads. For installations complying with IEC 61215-2:2016 and UL 1703, a safety factor of 1.5 should be applied for calculating the equivalent maximum authorized design loads. Project design loads depend on construction, applicable standards, location and local climate. Determination of the design loads is the responsibility of the racking suppliers and/or professional engineers. For detailed information, please follow local structural code or contact your professional structural engineer.

- Use appropriate corrosion-proof fastening materials. All mounting hardware (bolts, spring washers, flat washers, nuts) should be hot dip galvanized or stainless steel.

- Use a torque wrench for installation.

- Do not drill additional holes or modify the module frame. Doing so will void the warranty.

WHEN CLAMPS ARE USED AS FIXING MATERIAL:

- Install and tighten the module clamps to the mounting rails using the torque stated by the mounting hardware manufacturer. System designer and installer are responsible for load calculations and for proper design of support structure. It is recommended to use a torque wrench for installation. Tightening torques should respectively be within 17-23 Nm (12.5-17.0 ft-lb) for M8x1.25-Grade8.8 (5/16"-18 Grade B7) galvanized or A2-70 stainless steel coarse thread bolts, depending on bolt class. The yield strength of bolt and nut should not be less than 450 MPa.

- Clamp material should be anodized aluminum alloy or steel of appropriate grade. For frameless module used clamps, one buffer rubber material (Recommended material is EPDM) must be added between the clamp and the glass.

- Clamp positions are of crucial importance for the reliability of the installation, the clamp centerline must only be positioned within the authorized position ranges indicated below, depending on the configuration and load.

6.1 MOUNTING METHODS FOR FRAMELESS BIFACIAL MODULE (CLAMPING)

MIDDLE CLAMP:

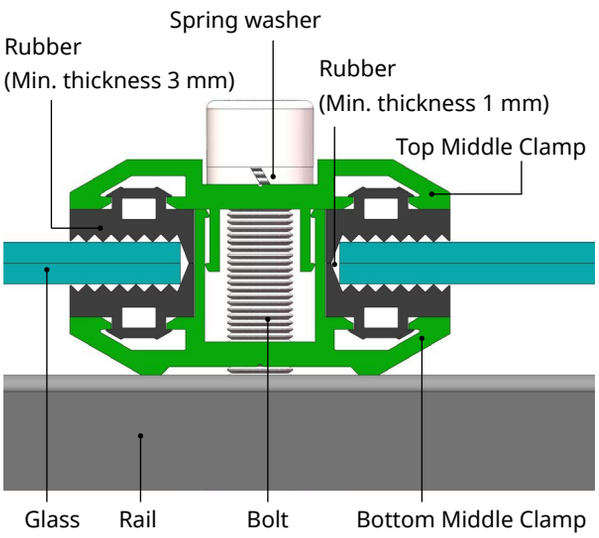

END CLAMP:

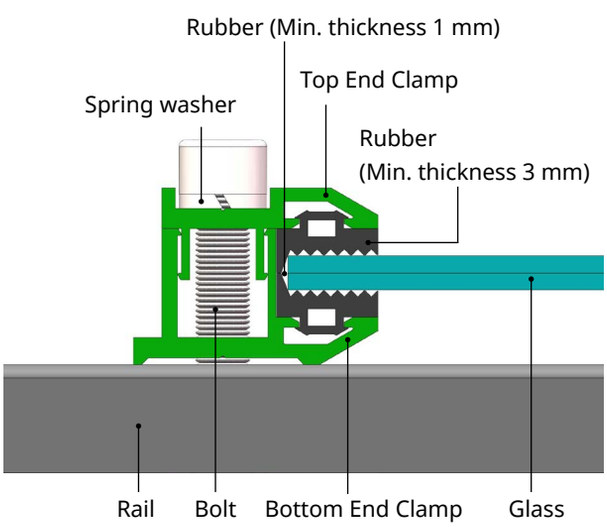

- The mounting methods have been qualified by Canadian Solar Inc., as well as certified by VDE and CSA.

- Canadian Solar Inc. warranty may be void in cases where improper clamps or unsuitable installation methods are found. When installing clamps, take measures so as:

  1. Not to bend the glass excessively.

  2. Not to cast shadow on the cells.

  3. Not to damage or scratch the surface of the glass.

  4. To ensure the clamps overlap the module by 13 mm to 15 mm.

  5. To ensure the minimum clamping clearance of the clamps ≤ 4 mm.

  6. To ensure thickness of top and bottom rubber ≥ 3 mm, and side rubber thickness ≥ 1 mm.

  7. The mounting rails shall be designed to limit as much as possible shade on module rearside cells.

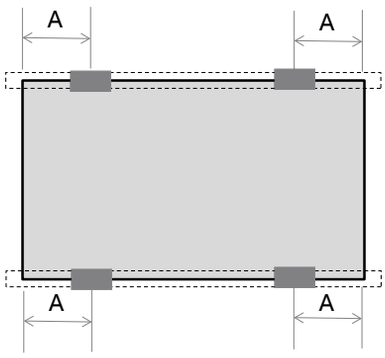

Use 4 clamps on the long side.
Mounting rails run parallel to the long side frame.

Clamp length ≥ 130 mm
A = 460 ± 20 mm
Maximum Load:
Uplift load ≤ 2400 Pa
Downforce load ≤ 2400 Pa

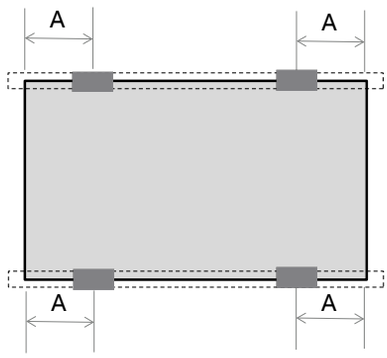

Use 4 clamps on the long side.
Mounting rails run parallel to the long side frame.

Clamp length ≥ 250 mm
A= 460 ± 20 mm
Maximum Load:
Uplift load ≤ 2400 Pa
Downforce load ≤ 3600 Pa

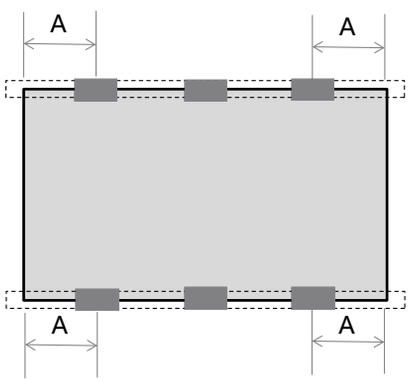

Use 6 clamps on the long side.
Mounting rails run parallel to the long side frame.

Clamp length ≥ 130 mm
A= 350 ± 50 mm
Maximum Load:
Uplift load ≤ 2400 Pa
Downforce load ≤ 3600 Pa

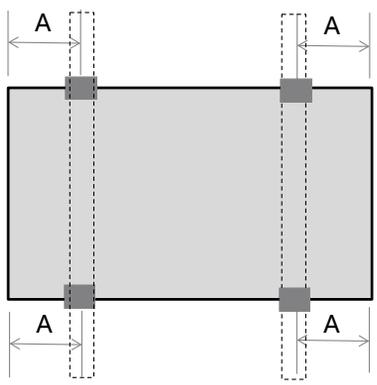

Use 4 clamps on the long side.
Mounting rails run perpendicular to the long side frame.
(Keep suitable clearance between mounting rails and module back side)

Clamp length ≥ 250 mm
A= 460 ± 20 mm
Maximum Load:
Uplift load ≤ 2400 Pa
Downforce load ≤ 5400 Pa

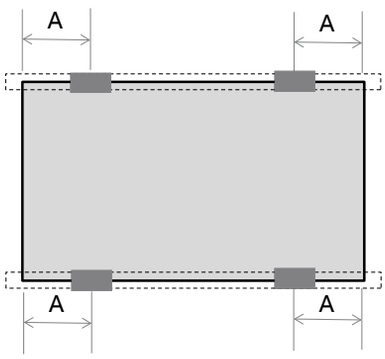

Use 4 clamps on the long side.
Mounting rails run parallel to the long side frame.

Clamp length ≥100 mm
A = 390 ± 20 mm
Maximum Load:
Uplift load ≤ 2400 Pa
Downforce load ≤ 2400 Pa

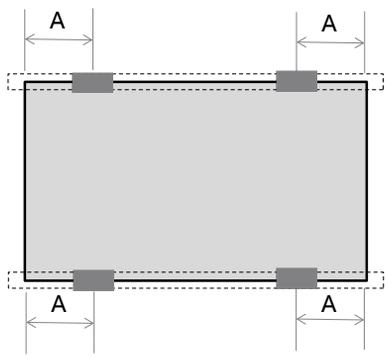

Use 4 clamps on the long side.
Mounting rails run parallel to the long side frame.

Clamp length ≥ 200 mm
A = 390 ± 20 mm
Maximum Load:
Uplift load ≤ 2400 Pa
Downforce load ≤ 3600 Pa

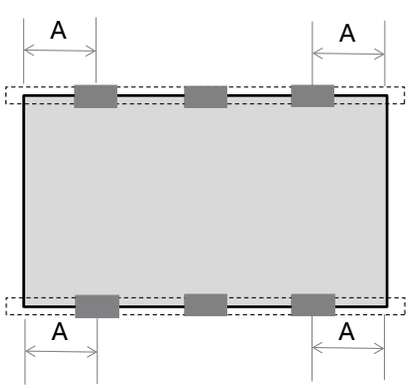

Use 6 clamps on the long side.
Mounting rails run parallel to the long side frame.

Clamp length ≥100 mm
A = 250 - 300 mm
Maximum Load:
Uplift load ≤ 2400 Pa
Downforce load ≤ 3600 Pa

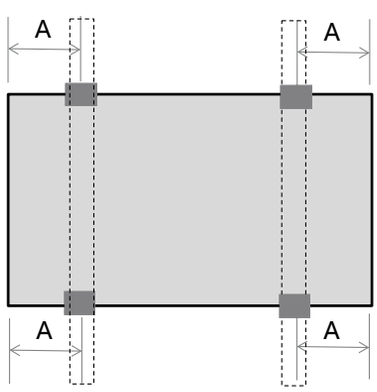

Use 4 clamps on the long side.
Mounting rails run perpendicular to the long side frame.
(Keep suitable clearance between mounting rails and module back side)

Clamp length ≥ 200 mm
A = 390 ± 20 mm
Maximum Load:
Uplift load ≤ 2400 Pa
Downforce load ≤ 5400 Pa

6.2 MOUNTING METHODS FOR FRAMELESS BIFACIAL MODULE (SINGLE-AXIS TRACKERS)

- These mounting methods have been qualified by Canadian Solar Inc., as well as certified by VDE and CSA.
- The clamps used in this section should follow the requirements in 6.1.
- Under no circumstances, the junction box should come in contact with the subjacent racking structure components.

If any racking structures, in particular the bearing house, needs to be placed under the module back glass, the gap between the junction box and the racking structure should be at least 40 mm.

- If your tracker design cannot meet the above distance requirement, please contact Canadian Solar Inc. technical support department in writing for further consultance.
- The system designer and installer are responsible for load calculations and for proper design of support structure.

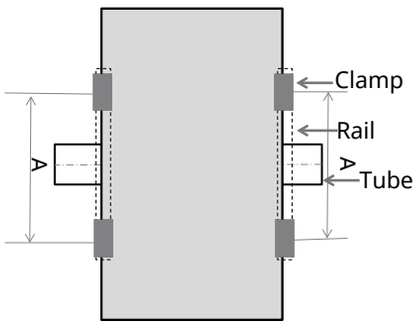

Use 4 clamps on the long side.
Mounting rails run parallel to the long side frame.
Mounting rails fixed on torque tube.

Clamp length ≥ 80 mm A = 1000 mm Maximum Load: Uplift load ≤ 1650 Pa Downforce load ≤ 1650 Pa	Clamp length ≥ 130 mm A = 1000 mm Maximum Load: Uplift load ≤ 2400 Pa Downforce load ≤ 2400 Pa

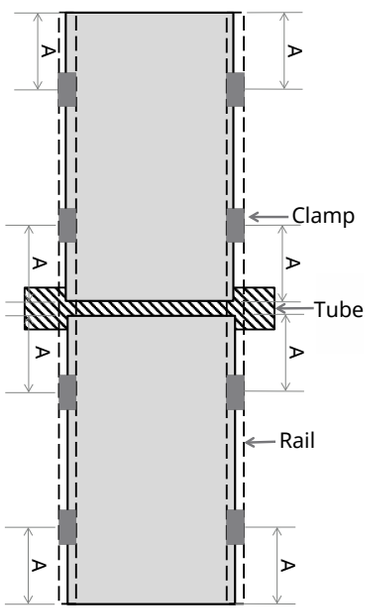

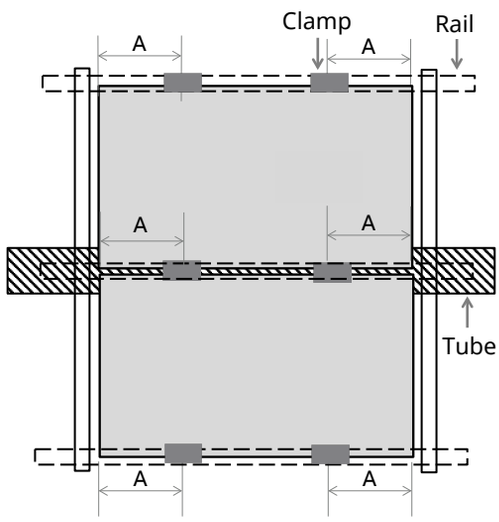

Two modules share one tube, portrait or landscape installation. Use 4 clamps on the long side of each module.
Mounting rails run parallel to the long side frame. Mounting rails fixed on torque tube (tracker).

Clamp length ≥ 130 mm
A = 460 ± 20 mm
Maximum Load:
Uplift load ≤ 2400 Pa
Downforce load ≤ 2400 Pa

6.3 MOUNTING METHODS FOR FRAMED BIFACIAL MODULE (BOLTING)

- The mounting method has been qualified by Canadian Solar Inc., as well as certified by VDE and CSA.
- Modules should be bolted to support structures through the mounting holes in the rear frame flanges only.
- Each module must be securely fastened at a minimum of 4 points on two opposite sides.

M8 X 1.25 (5/16") bolt and nut should be used.

Plain washer size should be M8 with outer diameter 16 mm.

The yield strength of bolt and nut should not be less than 450 MPa.

NOTICE Suitable bolt length should be chosen based on actual module frame height. For bifacial module with 30 mm frame height, our recommended maximum bolt length is 20 mm in order to properly insert the bolts through the mounting hole. The system designer is responsible to check that the racking supplier specified bolt length comply with above requirement and will not affect installation.

- Tightening torques should be within 17-23 Nm (12.5-17.0 ft-lbs) for M8 (5/16") coarse thread bolts, depending on bolt class.

- In areas with heavy wind loads, additional mounting points should be used. The system designer and the installer are responsible for calculating the load and ensuring that the support structure meets the requirements.

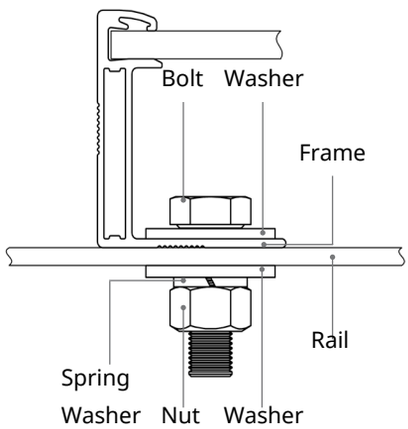

- Modules should be bolted at the following hole locations depending on the configuration and load:

CS3U-MB-AG, CS3U-PB-AG, CS3W-PB-AG

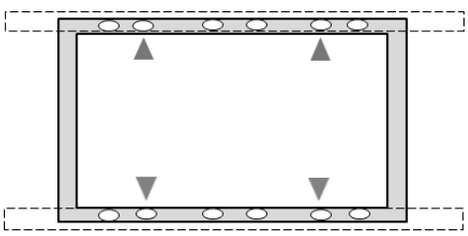

Bolting on long frame side using four middle mounting holes. Mounting rails run parallel to the long frame side.

Maximum Load:
Uplift load ≤ 2400 Pa
Downforce load ≤ 3600 Pa

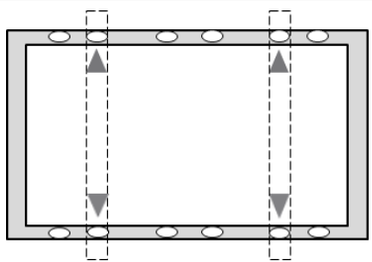

Bolting on long frame side using four middle mounting holes. Mounting rails run perpendicularly to the long frame side.

Maximum Load:
Uplift load ≤ 2400 Pa
Downforce load ≤ 5400 Pa

CS3K-MB-AG, CS3K-PB-AG

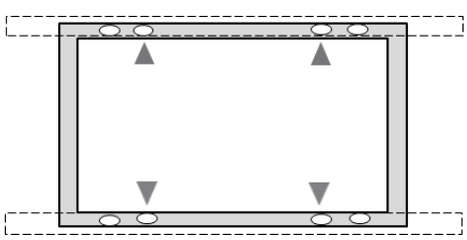

Bolting on long frame side using four innermost mounting holes. Mounting rails run parallel to the long frame side.

Maximum Load:
Uplift load ≤ 2400 Pa
Downforce load ≤ 3600 Pa

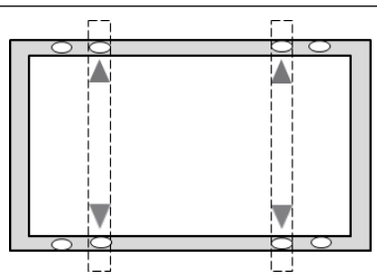

Bolting on long frame side using four innermost mounting holes. Mounting rails run perpendicularly to the long frame side.

Maximum Load:
Uplift load ≤ 2400 Pa
Downforce load ≤ 5400 Pa

6.4 MOUNTING METHODS FOR FRAMED BIFACIAL MODULE (CLAMPING)

- The mounting method has been qualified by Canadian Solar Inc. as well as certified by VDE and CSA.

- Each module must be securely fastened at a minimum of four points on two opposite sides. The clamps should be positioned symmetrically. The clamps should be positioned according to the authorized position ranges defined in table below. Install and tighten the module clamps to the mounting rails using the torque stated by the mounting hardware manufacturer. M8 X 1.25 (5/16") bolt and nut are used for this clamping method. The yield strength of bolt and nut should not be less than 450MPa.

- Tightening torques should be within 17-23 Nm (12.5-17.0 ft-lbs) for M8 (5/16"-18 Grade B7) coarse thread bolts, depending on the bolt class. For the bolt grade, the technical guideline from the fastener suppliers should be followed. Different recommendations from specific clamping hardware suppliers should prevail.

- The system designer and installer are responsible for load calculations and for proper design of support structure.

- The mounting rails shall be designed to limit as much as possible shade on module rear side cells

- Canadian Solar Inc.'s warranty may be void in cases where improper clamps or unsuitable installation methods are found. When installing inter-modules or end-type clamps, the clamps must:

  1. Not bend the module frame
  2. Not touch or cast shadows on the front glass
  3. Not damage the surface of the frame (to the exception of the clamps with bonding pins)
  4. Ensure to overlap the module frame by at least 5 mm (0.2 in)
  5. Overlap in length by at least
     a) 80 mm (3.15 in) when 2400 Pa < uplift load ≤ 4000 Pa is required
     b) 40 mm (1.57 in) when uplift load ≤ 2400 Pa is required
  6. Clamps to have a thickness of at least 3 mm (0.12 in)

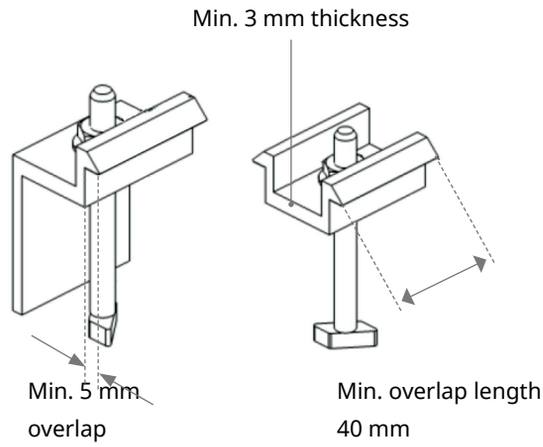

- Clamp material should be anodized aluminum alloy or stainless steel.

- Clamp positions are of crucial importance for the reliability of the installation. The clamp centerlines must only be positioned within the ranges indicated in table below, depending on the configuration and load.

- For configurations where the mounting rails run parallel to the frame, precautions should be taken to ensure the bottom flange of the module frame overlaps the rail by 10 ± 2 mm (0.39 in) or more, without creating undesirable shading on the rear side of the cells.

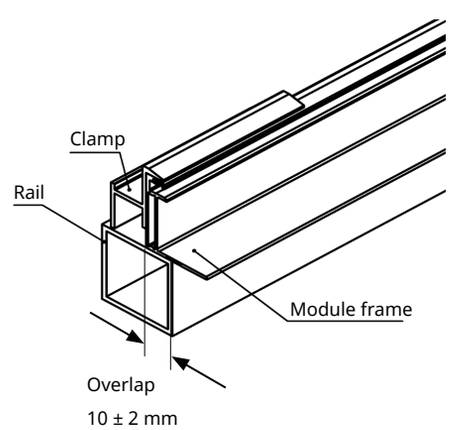

CS3W-PB-AG, CS3U-MB-AG AND CS3U-PB-AG

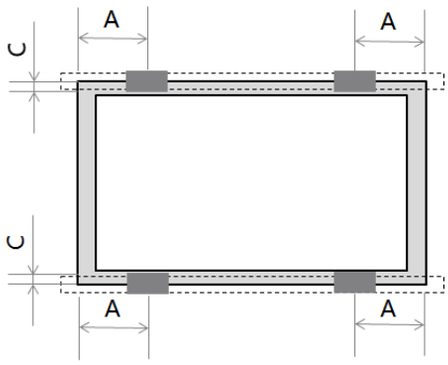

Use 4 clamps on the long side.
Mounting rails run parallel to the long side frame.

Clamp length ≥ 40 mm
A = (410 - 490) mm
C = 10 ± 2 mm (overlap between the rail and module frame)
Maximum Load:
Uplift load ≤ 2400 Pa
Downforce load ≤ 3600 Pa

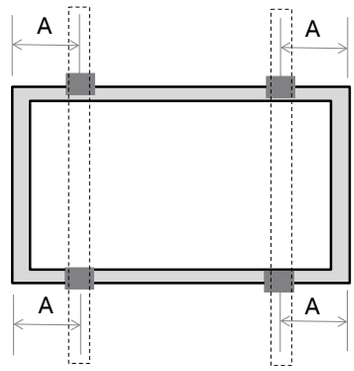

Use 4 clamps on the long side.
Mounting rails run perpendicular to the long side frame.

Clamp length ≥ 80mm
A = (410 - 490) mm
Maximum Load:
Uplift load ≤ 3600 Pa
Downforce load ≤ 5400 Pa

CS3K-MB-AG AND CS3K-PB-AG

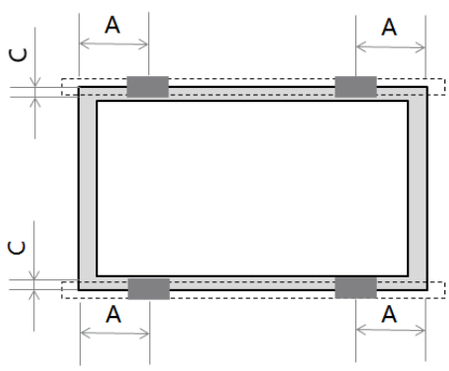

Use 4 clamps on the long side.
Mounting rails run parallel to the long side frame.

Clamp length ≥ 40 mm
A = (270 – 380) mm
C = 10 ± 2 mm
Maximum Load:
Uplift load ≤ 2400 Pa
Downforce load ≤ 3600 Pa

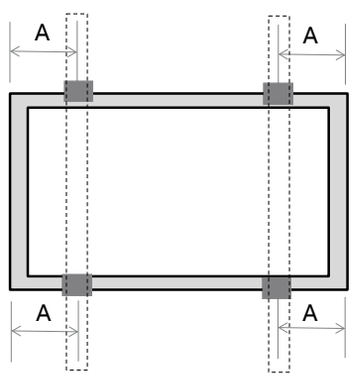

Use 4 clamps on the long side.
Mounting rails run perpendicular to the long side frame.

Clamp length ≥ 80mm
A = (270 – 380) mm
Maximum Load:
Uplift load ≤ 3600 Pa
Downforce load ≤ 5400 Pa

6.5 MOUNTING METHODS FOR FRAMED BIFACIAL MODULE (SINGLE-AXIS TRACKER)

- The bolts and clamps used in this section should follow the requirements in 6.3 and 6.4.
- Under any conditions the junction box cannot become in contact with the subjacent racking structure. If any racking structures, especially bearing house, have to be located under the modules, the gap between the junction box and the racking structure should be at least 30 mm (BiKu) and 50 mm (BiHiKu).
- If your tracker design cannot meet the above distance requirement, please contact Canadian Solar Inc technical support department in writing for advices.

CS3U-MB-AG AND CS3U-PB-AG

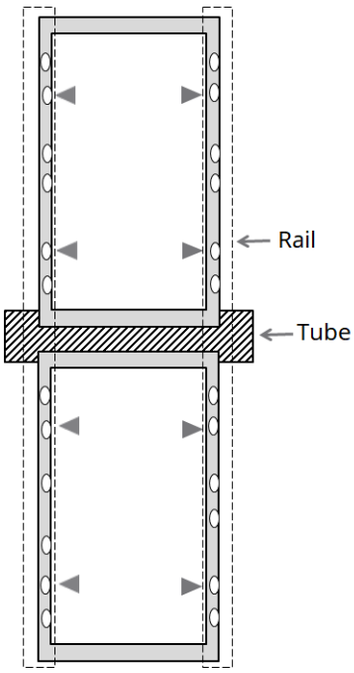

Two modules share one tube, portrait installation.
Bolting on long frame side using four middle mounting holes.
Mounting rails run parallel to the long side frame.
Mounting rails fixed on torque tube (tracker).

Maximum Load:
Uplift load ≤ 2400 Pa
Downforce load ≤ 2400 Pa

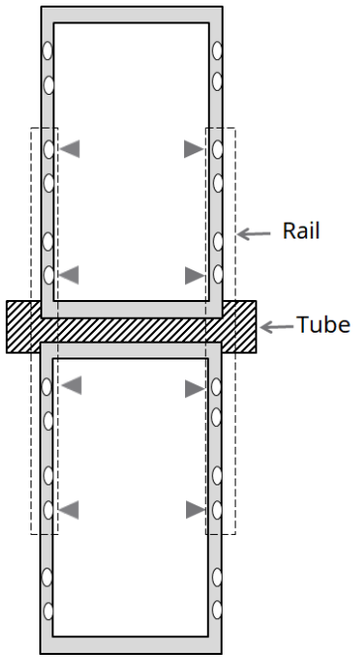

Two modules share one tube, portrait installation.
Bolting on long frame side using 400 mm + 1300 mm mounting holes as shown at arrow location.
Mounting rails run parallel to the long side frame.
Mounting rails fixed on torque tube (tracker).

Maximum Load:
Uplift load ≤ 1800 Pa
Downforce load ≤ 1800 Pa

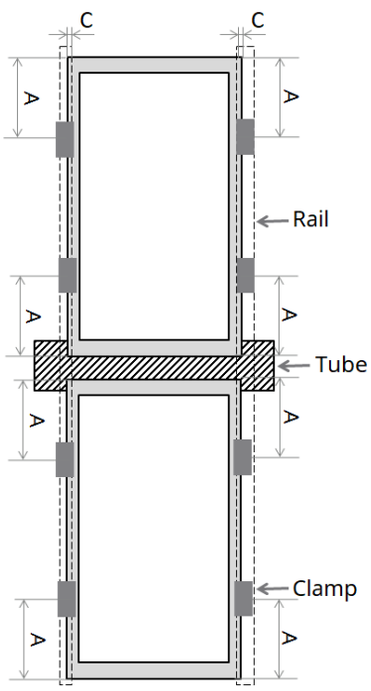

Two modules share one tube, portrait installation.
Use 4 clamps on the long side of each module.
Mounting rails run parallel to the long side frame.
Mounting rails fixed on torque tube (tracker).

Clamp length ≥ 40mm
A = (340 - 550) mm
C = 10 ± 2 mm
Maximum Load:
Uplift load ≤ 2400 Pa
Downforce load ≤ 2400 Pa

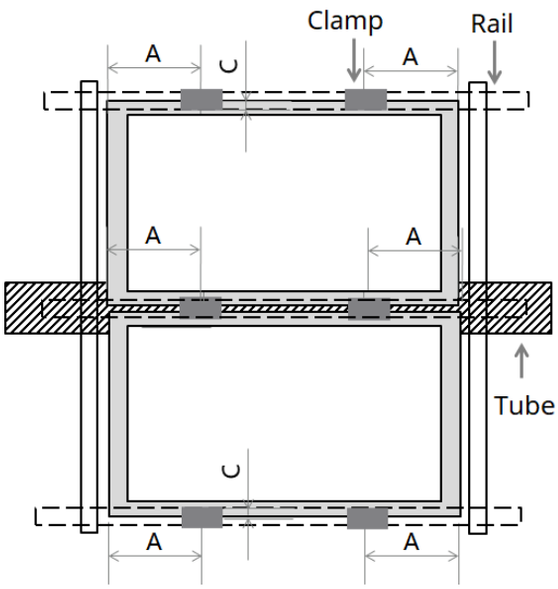

Two modules share one tube, landscape installation.
Use 4 clamps on the long side of each module.
Mounting rails run parallel to the long side frame.
Mounting rails fixed on torque tube (tracker).

Clamp length ≥ 40mm
A = (340 - 550) mm
C = 10 ± 2 mm
Maximum Load:
Uplift load ≤ 2400 Pa
Downforce load ≤ 2400 Pa

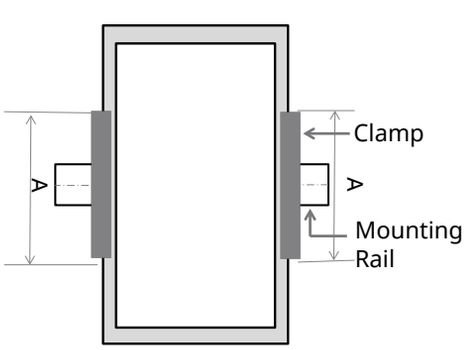

Use 2 long center clamps on the long side of each module or bolting on the center holes of the long side frame.

Overlap length of clamp and frame ≥ 400 mm
Maximum Load:
Uplift load ≤ 2400 Pa
Downforce load ≤ 2400 Pa

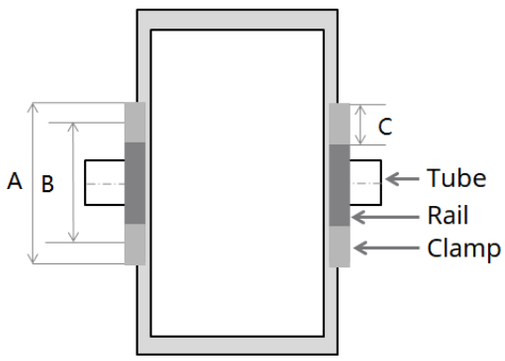

Use 4 clamps with long center rail on the long side of each module.

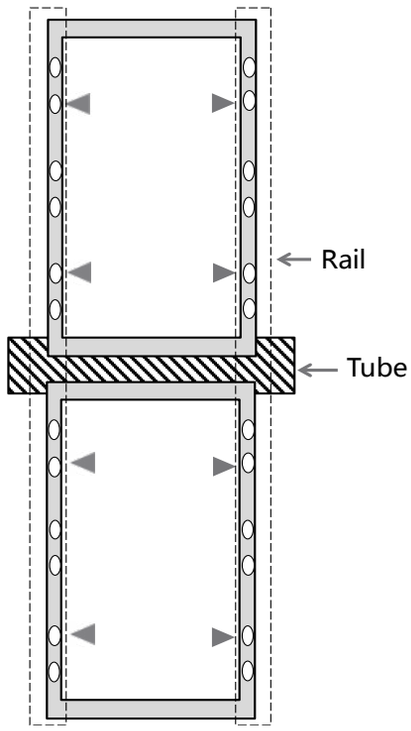

Two modules share one tube, portrait installation.
Bolting on long frame side using four innermost mounting holes.
Mounting rails run parallel to the long side frame.
Mounting rails fixed on torque tube (tracker).

Overlap support length of between rail and frame
A ≥ 730 mm
Center distance between clamps B ≥ 650 mm
Clamp length C ≥ 80 mm
Maximum Load:
Uplift load ≤ 2400 Pa
Downforce load ≤ 2400 Pa

Maximum Load:
Uplift load ≤ 2400 Pa
Downforce load ≤ 2400 Pa

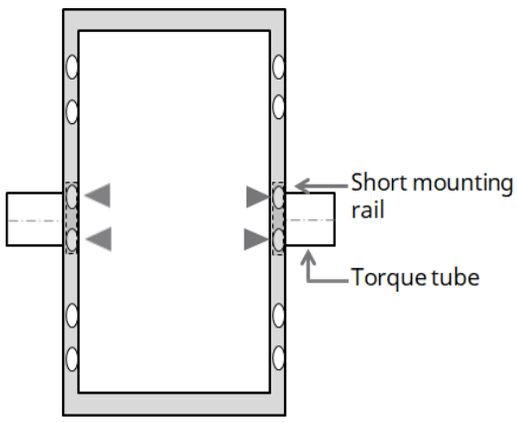

Use 4 center mounting holes on the long side of each module.*
Mounting rails run parallel to the long side frame.

Maximum Load:
Uplift load ≤ 1800 Pa
Downforce load ≤ 1800 Pa

*Please refer to the module datasheet for the position of the module holes in detail.

The following tracker manufacturers and types are approved with Canadian Solar framed bifacial modules.

Module Type	Compatible Tracker	Mounting Hardware	Maximum Load (Pa)	Reference Manual (Version No.)
CS3U-MB-AG CS3U-PB-AG	ATI DuraTrack™HZ Tracking System(V3)	Standard 300 mm clamp 20563/20751 Hi-rise 300 mm clamp-20822 Hi-rise 400 mm clamp-20834	Uplift load ≤ 2400 Pa Downforce load ≤ 2400 Pa	DuraTrack HZ Solar Tracker Installation Guide , (June 2017, Rev. B-03)
CS3U-MB-AG CS3U-PB-AG	NEXTracker NX Horizon	Short Rail V2.4.9 (400 mounting holes position) Rail part No: 21190, 21191	Uplift load ≤2400 Pa Downforce load ≤ 2400 Pa	NEXTracker NX Horizon 2.4 Short Rail Installation Manual (PDM-000149)
CS3U-MB-AG CS3U-PB-AG	Arctech single-axis tracker Portrait one row	440 mm rail (bolting method / M6 bolt + M6 spring washer + M6 plain washer (O.D. = 18 mm) / 400 mm holes position) Drawing No: CS2018013	Uplift load ≤ 2400 Pa Downforce load ≤ 2400 Pa	SSMFIM-rev01 （Skyline-Module Fixing Installation Manual）
CS3U-MB-AG CS3U-PB-AG	Arctech single-axis tracker Portrait two rows	3572 mm rail (bolting method / M8 bolt + M8 plain washer (O.D. = 16 mm) / 1155 mm holes position) Drawing No: CS2018012B	Uplift load ≤ 2400 Pa Downforce load ≤ 2400 Pa	SSMFIM-rev01 （SkySmart-Module Fixing Installation Manual）
CS3U-MB-AG CS3U-PB-AG	Soltec SF7 Single-Axis Tracker Portrait two rows	2556 mm rail (Bolting method / M6 bolt + M6 plain washer (O.D. = 18 mm) / 1300 mm + 400 mm holes position) Drawing No: SF7-MR-04-039_Drbiku-1800Pa-30mm	Uplift load ≤ 1800 Pa Downforce load ≤ 1800 Pa	SF7QG-1500V-en, revision 1.0
CS3U-MB-AG CS3U-PB-AG	Soltec SF7 Single-Axis Tracker Portrait two rows	3311 mm long rail (bolting method/ M6 bolt + M6 plain washer (O.D. = 18 mm) / 1155 mm holes position) Rail Drawing No: SF7-MR-04-040_Drbiku-2400Pa-30mm	Uplift load ≤ 2400 Pa Downforce load ≤ 2400 Pa	SF7QG-1500V-en, revision 1.0

Module Type	Compatible Tracker	Mounting Hardware	Maximum Load (Pa)	Reference Manual (Version No.)
CS3W-PB-AG	ATI DuraTrack™HZ Tracking System	Standard 300 mm clamp 20563/20751 Hi-rise 300 mm clamp-20822	Uplift load ≤ 1200 Pa Downforce load ≤ 1500 Pa	DuraTrack HZ Solar Tracker Installation Guide
		Hi-rise 400 mm clamp-20834	Uplift load ≤ 1800 Pa Downforce load ≤ 2400 Pa	
		Hi-rise 400 mm clamp-20857 Clamp Ear 80 mm	Uplift load ≤ 2400 Pa Downforce load ≤ 2400 Pa	
CS3W-PB-AG	Arctech single-axis tracker Portrait one row	730 mm rail 80 mm clamp Drawing No: CS2018014/ CS2018015/ CS2018016	Uplift load ≤ 2400 Pa Downforce load ≤ 2400 Pa	SSMFIM-rev01 (Skyline-Module Fixing Installation Manual) DuraTrack HZ Solar Tracker Installation Guide
CS3W-PB-AG	NEXTracker NX Horizon	400 mm frame hole attachment. Uses V2.4.10 rail + 4x bobtails (head O.D. 16.8 mm)	Uplift load ≤ 1800 Pa Downforce load ≤ 1800 Pa	NEXTracker NX Horizon 2.4 Rail Installation Manual (PDM-000176)
		400 mm + 1155 mm frame hole attachment. Uses V2.4.10 rail + 1,180 mm supplemental rail + 8x bobtails (head O.D. 16.8 mm)	Uplift load ≤ 2800 Pa Downforce load ≤ 3000 Pa	
CS3W-PB-AG	Arctech single-axis tracker Portrait two rows	3482 mm rail (bolting method/ M8 bolt+M8 plain washer (O.D.=16mm) / 1155 mm holes position) Drawing No: CS2018011	Uplift load ≤ 2400 Pa Downforce load ≤ 2400 Pa	SSMFIM-rev01 (SkySmart-Module Fixing Installation Manual)
CS3W-PB-AG	Soltec SF7 Sing-le-Axis Tracker Portrait two rows	3421 mm long rail (bolting method / M6 bolt+M6 plain washer (O.D.=18 mm) / 1155 mm holes position) Rail Drawing No: SF7-MR-04-041_ Dr-bihiku-2400Pa-30 mm frame	Uplift load ≤ 2400 Pa Downforce load ≤ 2400 Pa	SF7QG-1500V-en, revision 1.0

The allowable maximum twist angle of the module is 0.5 degree.

Please contact the tracker manufacturer and Canadian Solar Inc. technical support department for details in regard to specific projects.

7.0 MAINTENANCE

- Do not make modifications to any component of the PV module (diode, junction box, plug connectors or others).
- Regular maintenance is required to keep modules clear of snow, bird droppings, seeds, pollen, leaves, branches, dirt spots, and dust.
- Modules with sufficient tilt (at least 15°), generally do not require cleaning (rain will have a self-cleaning effect). If the module has become soiled, it shall be washed with water and a non-abrasive cleaning brush or sponge during the cool part of the day. Do not scrape or rub dry dirt away, as this may cause micro scratches.
- Snow should be removed using a soft brush.
- Periodically inspect the system to check the integrity of all wiring and supports.
- To protect against electric shock or injury, electrical or mechanical inspections and maintenance should be performed by qualified personnel only.
- Please refer to Annex C (Module Cleaning Guide) for more information on module cleaning.

AMENDED EDITIONS AND DATES

- Rev 1.0 is released in June, 2018.
- Rev 1.1 is released in March, 2019.
- Rev 1.2 is released in June, 2019.
- Rev 1.21 is released in July, 2019.
- Rev 1.3 is released in September, 2019.

EN-Rev IM/GN-BM-EN/1.3 Copyright © September 2019. Canadian Solar Inc.

ANNEX A: MECHANICAL AND ELECTRICAL RATINGS

Standard Test Conditions are: irradiance of 1 kW/m^2, air mass (AM) spectrum of 1.5, and cell temperature of 25°C. The electrical characteristics are respectively within ±10 percent or [0; +5 W] of the indicated values for Isc, Voc and Pmax. Specifications are subject to change without notice.

TABLE 1: MECHANICAL AND ELECTRICAL RATINGS UNDER STC

Model Type	Maximum power Pmax<W>	Operating voltage Vmp <V>	Operating current Imp <A>	Open Circuit Voltage Voc <V>	Short Circuit Current Isc <A>	Max. Series Fuse Rating <A>	Overall Dimension <mm>	Weight <Kg>
CS3U-350MB-FG	350	38.8	9.03	46.6	9.53	25	2012 × 992 × 5.8 mm (79.2 × 39.1 × 0.23 in) without J-Box and corner protector	29.3 kg (64.6 lbs)
CS3U-355MB-FG	355	39.0	9.11	46.8	9.61	25		
CS3U-360MB-FG	360	39.2	9.19	47.0	9.69	25		
CS3U-365MB-FG	365	39.4	9.27	47.2	9.77	25		
CS3U-370MB-FG	370	39.6	9.35	47.4	9.85	25		
CS3U-375MB-FG	375	39.8	9.43	47.6	9.93	25		
CS3U-380MB-FG	380	40.0	9.50	47.8	10.01	25		
CS3U-385MB-FG	385	40.2	9.58	48.0	10.09	25		
CS3U-390MB-FG	390	40.4	9.66	48.2	10.17	25		
CS3U-395MB-FG	395	40.6	9.73	48.4	10.25	25		
CS3U-400MB-FG	400	40.8	9.81	48.6	10.33	25		
CS3U-405MB-FG	405	41.0	9.88	49.3	10.44	25		
CS3U-410MB-FG	410	41.2	9.96	49.5	10.52	25		
CS3K-280MB-FG	280	31.7	8.84	38.5	9.49	25	1690 × 992 × 5.8 mm (66.5 × 39.1 × 0.23 in) without J-Box and corner protector	24.3 kg (53.6 lbs)
CS3K-285MB-FG	285	31.9	8.94	38.7	9.57	25		
CS3K-290MB-FG	290	32.1	9.04	38.9	9.65	25		
CS3K-295MB-FG	295	32.3	9.14	39.1	9.73	25		
CS3K-300MB-FG	300	32.5	9.24	39.3	9.82	25		
CS3K-305MB-FG	305	32.7	9.33	39.5	9.90	25		
CS3K-310MB-FG	310	32.9	9.43	39.7	9.98	25		
CS3K-315MB-FG	315	33.1	9.52	39.9	10.06	25		
CS3K-320MB-FG	320	33.3	9.61	40.1	10.14	25		
CS3K-325MB-FG	325	33.5	9.71	40.3	10.22	25		
CS3K-330MB-FG	330	33.7	9.80	40.5	10.30	25		
CS3U-350MB-AG	350	38.8	9.03	46.6	9.53	25	2022 × 992 × 30 mm (79.6 × 39.1 × 1.18 in)	25.7 kg (56.7 lbs)
CS3U-355MB-AG	355	39.0	9.11	46.8	9.61	25		
CS3U-360MB-AG	360	39.2	9.19	47.0	9.69	25		
CS3U-365MB-AG	365	39.4	9.27	47.2	9.77	25		
CS3U-370MB-AG	370	39.6	9.35	47.4	9.85	25		
CS3U-375MB-AG	375	39.8	9.43	47.6	9.93	25		
CS3U-380MB-AG	380	40.0	9.50	47.8	10.01	25		
CS3U-385MB-AG	385	40.2	9.58	48.0	10.09	25		
CS3U-390MB-AG	390	40.4	9.66	48.2	10.17	25		
CS3U-395MB-AG	395	40.6	9.73	48.4	10.25	25		
CS3U-400MB-AG	400	40.8	9.81	48.6	10.33	25		
CS3U-405MB-AG	405	41.0	9.88	49.3	10.44	25		
CS3U-410MB-AG	410	41.2	9.96	49.5	10.52	25		
CS3K-280MB-AG	280	31.7	8.84	38.5	9.49	25	1696 × 992 × 30 mm (66.8 × 39.1 × 1.18 in)	22.1 kg (48.7 lbs)
CS3K-285MB-AG	285	31.9	8.94	38.7	9.57	25		
CS3K-290MB-AG	290	32.1	9.04	38.9	9.65	25		
CS3K-295MB-AG	295	32.3	9.14	39.1	9.73	25		
CS3K-300MB-AG	300	32.5	9.24	39.3	9.82	25		
CS3K-305MB-AG	305	32.7	9.33	39.5	9.90	25		
CS3K-310MB-AG	310	32.9	9.43	39.7	9.98	25		
CS3K-315MB-AG	315	33.1	9.52	39.9	10.06	25		
CS3K-320MB-AG	320	33.3	9.61	40.1	10.14	25		
CS3K-325MB-AG	325	33.5	9.71	40.3	10.22	25		
CS3K-330MB-AG	330	33.7	9.80	40.5	10.30	25		

Model Type	Maximum power Pmax<W>	Operating voltage Vmp <V>	Operating current Imp <A>	Open Circuit Voltage Voc <V>	Short Circuit Current Isc <A>	Max. Series Fuse Rating <A>	Overall Dimension <mm>	Weight <Kg>
CS3U-320PB-FG	320	37.6	8.52	45.1	9.04	25	2012 × 992 × 5.8 mm (79.2 × 39.1 × 0.23 in) without J-Box and corner protector	29.3 kg (64.6 lbs)
CS3U-325PB-FG	325	37.8	8.60	45.3	9.12	25		
CS3U-330PB-FG	330	38.0	8.69	45.5	9.20	25		
CS3U-335PB-FG	335	38.2	8.77	45.7	9.28	25		
CS3U-340PB-FG	340	38.4	8.86	45.9	9.36	25		
CS3U-345PB-FG	345	38.6	8.94	46.1	9.44	25		
CS3U-350PB-FG	350	39.2	8.94	46.6	9.51	25		
CS3U-355PB-FG	355	39.4	9.02	46.8	9.59	25		
CS3U-360PB-FG	360	39.6	9.10	47.0	9.67	25		
CS3U-365PB-FG	365	39.8	9.18	47.2	9.75	25		
CS3U-370PB-FG	370	40.0	9.26	47.4	9.83	25		
CS3U-375PB-FG	375	40.2	9.34	47.6	9.91	25		
CS3U-380PB-FG	380	40.4	9.42	47.8	9.99	25		
CS3U-385PB-FG	385	40.6	9.50	48.0	10.07	25		
CS3U-390PB-FG	390	40.8	9.56	48.6	10.17	25		
CS3U-395PB-FG	395	41.0	9.64	48.8	10.24	25		
CS3U-400PB-FG	400	41.2	9.71	49.0	10.30	25		
CS3U-405PB-FG	405	41.4	9.79	49.2	10.37	25		
CS3U-410PB-FG	410	41.6	9.86	49.4	10.43	25		
CS3U-415PB-FG	415	41.8	9.93	49.6	10.49	25		
CS3U-420PB-FG	420	42.0	10.00	49.8	10.55	25		
CS3K-265PB-FG	265	30.6	8.66	37.3	9.22	25	1690 × 992 × 5.8 mm (66.5 × 39.1 × 0.23 in) without J-Box and corner protector	24.3 kg (53.6 lbs)
CS3K-270PB-FG	270	30.8	8.77	37.5	9.30	25		
CS3K-275PB-FG	275	31.0	8.88	37.7	9.38	25		
CS3K-280PB-FG	280	31.2	8.98	37.9	9.47	25		
CS3K-285PB-FG	285	31.4	9.08	38.1	9.56	25		
CS3K-290PB-FG	290	32.3	8.98	38.9	9.49	25		
CS3K-295PB-FG	295	32.5	9.08	39.1	9.57	25		
CS3K-300PB-FG	300	32.7	9.18	39.3	9.65	25		
CS3K-305PB-FG	305	32.9	9.28	39.5	9.73	25		
CS3K-310PB-FG	310	33.1	9.37	39.7	9.81	25		
CS3K-315PB-FG	315	33.3	9.46	39.9	9.89	25		
CS3K-320PB-FG	320	33.5	9.56	40.1	9.97	25		
CS3K-325PB-FG	325	33.7	9.65	40.9	10.21	25		
CS3K-330PB-FG	330	33.9	9.74	41.1	10.29	25		
CS3K-335PB-FG	335	34.1	9.83	41.3	10.37	25		
CS3K-340PB-FG	340	34.3	9.92	41.5	10.45	25		
CS3K-345PB-FG	345	34.5	10.00	41.7	10.52	25		
CS3K-350PB-FG	350	34.7	10.09	41.9	10.60	25		
CS3U-350PB-AG	350	39.2	8.94	46.6	9.51	25	2022 × 992 × 30 mm (79.6 × 39.1 × 1.18 in)	25.7 kg (56.7 lbs)
CS3U-355PB-AG	355	39.4	9.02	46.8	9.59	25		
CS3U-360PB-AG	360	39.6	9.10	47.0	9.67	25		
CS3U-365PB-AG	365	39.8	9.18	47.2	9.75	25		
CS3U-370PB-AG	370	40.0	9.26	47.4	9.83	25		
CS3U-375PB-AG	375	40.2	9.34	47.6	9.91	25		
CS3U-380PB-AG	380	40.4	9.42	47.8	9.99	25		
CS3U-385PB-AG	385	40.6	9.50	48.0	10.07	25		
CS3U-390PB-AG	390	40.8	9.56	48.6	10.17	25		
CS3U-395PB-AG	395	41.0	9.64	48.8	10.24	25		
CS3U-400PB-AG	400	41.2	9.71	49.0	10.30	25		
CS3U-405PB-AG	405	41.4	9.79	49.2	10.37	25		
CS3U-410PB-AG	410	41.6	9.86	49.4	10.43	25		
CS3U-415PB-AG	415	41.8	9.93	49.6	10.49	25		
CS3U-420PB-AG	420	42.0	10.00	49.8	10.55	25		

EN-Rev IM/GN-BM-EN/1.3 Copyright © September 2019. Canadian Solar Inc.

Model Type	Maximum power Pmax<W>	Operating voltage Vmp <V>	Operating current Imp <A>	Open Circuit Voltage Voc <V>	Short Circuit Current Isc <A>	Max. Series Fuse Rating <A>	Overall Dimension <mm>	Weight <Kg>
CS3K-265PB- AG	265	30.6	8.66	37.3	9.22	25	1696 × 992 × 30 mm (66.8 × 39.1 × 1.18 in)	25.7 kg (56.7 lbs)
CS3K-270PB- AG	270	30.8	8.77	37.5	9.30	25		
CS3K-275PB- AG	275	31.0	8.88	37.7	9.38	25		
CS3K-280PB- AG	280	31.2	8.98	37.9	9.47	25		
CS3K-285PB- AG	285	31.4	9.08	38.1	9.56	25		
CS3K-290PB- AG	290	32.3	8.98	38.9	9.49	25		
CS3K-295PB- AG	295	32.5	9.08	39.1	9.57	25		
CS3K-300PB- AG	300	32.7	9.18	39.3	9.65	25		
CS3K-305PB- AG	305	32.9	9.28	39.5	9.73	25		
CS3K-310PB- AG	310	33.1	9.37	39.7	9.81	25		
CS3K-315PB- AG	315	33.3	9.46	39.9	9.89	25		
CS3K-320PB- AG	320	33.5	9.56	40.1	9.97	25		
CS3K-325PB- AG	325	33.7	9.65	40.9	10.21	25		
CS3K-330PB- AG	330	33.9	9.74	41.1	10.29	25		
CS3K-335PB- AG	335	34.1	9.83	41.3	10.37	25		
CS3K-340PB-AG	340	34.3	9.92	41.5	10.45	25		
CS3K-345PB-AG	345	34.5	10.00	41.7	10.52	25		
CS3K-350PB-AG	350	34.7	10.09	41.9	10.60	25		
CS3W-380PB-AG	380	37.9	10.03	46.4	10.58	25	2132 × 1048 × 30 mm (83.9 × 41.3 × 1.18 in)	28.2kg (62.2 lbs)
CS3W-385PB-AG	385	38.1	10.11	46.6	10.66	25		
CS3W-390PB-AG	390	38.3	10.19	46.8	10.74	25		
CS3W-395PB-AG	395	38.5	10.26	47	10.82	25		
CS3W-400PB-AG	400	38.7	10.34	47.2	10.9	25		
CS3W-405PB-AG	405	38.9	10.42	47.4	10.98	25		
CS3W-410PB-AG	410	39.1	10.49	47.6	11.06	25		
CS3W-415PB-AG	415	39.3	10.56	47.8	11.14	25		
CS3W-420PB-AG	420	39.5	10.64	48.0	11.26	25		
CS3W-425PB-AG	425	39.7	10.71	48.2	11.29	25		
CS3W-430PB-AG	430	39.9	10.78	48.4	11.32	25		
CS3W-435PB-AG	435	40.1	10.85	48.6	11.35	25		
CS3W-440PB-AG	440	40.3	10.92	48.7	11.40	25		
CS3W-445PB-AG	445	40.5	10.99	48.8	11.45	25		

ANNEX B: ALTERNATIVE GROUNDING METHODS

Canadian Solar modules can be grounded using third party grounding devices as described below. The grounding methods are certified by CSA according to UL1703. All the basic requirements of the main installation manual should apply to the alternative grounding methods. For detailed grounding instructions, please refer to related third party installation manuals.

Company	Grounding Hardware	Compatible Mounting System	Reference Manual (Version No.)
Variety	Lay-in-Lug + Star Washer (UL2703&UL467 certified)	Variety	Related reference installation manual
Array Technologies Inc.	Grounding Strip	ATI Duratrack HZ Solar Tracker(V3)	DuraTrack HZ Solar Tracker Installation Guide , (June 2017, Rev. B-03)
DYNORAXX Inc.	DynoRaxx® DynoBond spring clips	-----	DynoRaxx® DynoBond Installation Manual (publication no 090413)
RBI Solar Inc.	Raised Zee purlin integrated with pre-punched grounding holes	RBI Solar Ground Mount System Model GM-I	Ground Mount System Model GM-I Module Installation Manual (14 April 2014, version 21)
NEXTracker Inc.	1/4-in collar and 1/4-in pin	NX Horizon 2.2.1	NEXTracker NX Horizon 2.2.1 Short Rail Installation Manual (PDM-000103 Rev. A)
BURNDY LLC.	WEEB-UIR	RBI Solar Groundmount	Weeb Installation Instructions For RBI Solar Groundmount Only (104-0404-000074-003)

ANNEX C: MODULE CLEANING GUIDELINES

This manual covers the requirements for the cleaning procedure of Canadian Solar Inc.'s photovoltaic modules. The purpose of these cleaning guidelines is to provide general information for cleaning Canadian Solar modules. System users and professional installers should read these guidelines carefully and strictly follow these instructions.

Failure to follow these instructions may result in death, injury or damage to the photovoltaic modules. Damages induced by inappropriate cleaning procedures will void Canadian Solar Inc. warranty.

Safety Warning

- cleaning activities create risk of damaging the modules and array components, as well as increasing the potential electric shock hazard.
- Cracked or broken modules represent an electric shock hazard due to leakage currents, and the risk of shock is increased when modules are wet. Before cleaning, thoroughly inspect modules for cracks, damage, and loose connections.
- The voltage and current present in an array during daylight hours are sufficient to cause a lethal electrical shock.
- Ensure that the circuit is disconnected before starting the cleaning procedure as contact with leakage of electrically active parts can result in injury.
- Ensure that the array has been disconnected to other active components (such as inverter or combiner boxes) before starting with the cleaning.
- Wear suitable protection (clothes, insulated gloves, etc.).
- Do not immerse the module, partially or totally, in water or any other cleaning solution.

HANDLING NOTICE

NOTICE

- Use a proper cleaning solution and suitable cleaning equipment.

- Do not use abrasive or electric cleaners on the module.

- Particular attention should be taken to avoid the module backsheet or frame to come in contact with sharp objects, as scratches may directly affect product safety.

- Do not use abrasive cleaners, de-greasers or any unauthorized chemical substance (e.g. oil, lubricant, pesticide, etc.) on the module.

- Do not use cleaning corrosive solutions containing hydrofluoric acid, alkali, acetone, or industrial alcohol. Only substances explicitly approved by Canadian Solar are allowed to be used for cleaning modules.

- Canadian Solar Inc. recommends to avoid rotating brush cleaning methods, as they could create micro-cracks in the PV modules.

- Dirt must never be scraped or rubbed away when dry, as this will cause micro-scratches on the glass surface.

OPERATION PREPARATION

- Noticeable dirt must be rubbed away by gentle cleaning implement (soft cloth, sponge or brush with soft bristles).

- Ensure that brushes or agitating tools are not abrasive to glass, EPDM, silicone, aluminum, or steel.

- Conduct the cleaning activities avoiding the hottest hours of the day, in order to avoid thermal stress on the module.

We recommend the following to be used:
- Water with low mineral content
- Near neutral pH water
- The maximum water pressure recommended is 4 MPa (40 bar)

CLEANING METHODS

Method A: Compressed Air

Canadian Solar Inc. recommends cleaning the soft dirt (like dust) on modules just with air pressure. This technique can be applied as long as the method is efficient enough considering the existing conditions.

Method B: Wet cleaning

If excessive soiling is present on the module surface, a non-conductive brush, sponge, or other mild agitating method may be used with caution.

- Ensure that any brushes or agitating tools are constructed with non-conductive materials to minimize risk of electric shock and that they are not abrasive to the glass or the aluminum frame.

- If grease is present, an environmental friendly cleaning agent may be used with caution.