CanadianSolar

INSTALLATION MANUAL OF STANDARD SOLAR MODULES

For professional use only

1.0 GENERAL INFORMATION |3

1.1 INSTALLATION MANUAL DISCLAIMER |3

1.2 LIMITATION OF LIABILITY |3

2.0 SAFETY PRECAUTIONS |3

2.1 INFORMATION PURSUANT TO ART. 33 OF THE REACH REGULATION |4

3.0 MECHANICAL / ELECTRICAL SPECIFICATIONS |4

4.0 UNPACKING AND STORAGE |5

5.0 MODULE INSTALLATION |6

5.1 MODULE WIRING |8

5.2 GROUNDING |11

6.0 MOUNTING INSTRUCTIONS |12

6.1 MOUNTING METHOD: BOLTING |13

7.0 MAINTENANCE |16

ANNEX A: ALTERNATIVE MOUNTING METHODS |17

MOUNTING METHOD A: CLAMPING |17

MOUNTING METHOD B: INSERTION SYSTEMS |31

MOUNTING METHOD C: CENTER MOUNTING METHOD WITH THIRD PARTY TRACKER |34

ANNEX B: ALTERNATIVE GROUNDING METHODS |35

ANNEX C: MECHANICAL AND ELECTRICAL RATINGS |37

ANNEX D: MODULE CLEANING GUIDELINES |43

AMENDED EDITIONS AND DATES |44

EN-Rev IM/GN-AM-EU/1.8 Copyright © September, 2019. Canadian Solar Inc.

1.0
GENERAL INFORMATION

This general manual provides important safety information relating to the installation, maintenance and handling of CS-series solar modules.

Professional installer must read these guidelines carefully and strictly follow these instructions. Failure to follow these instructions may result in death, injury or property damage. The installation and handling of PV modules requires professional skills and should only be performed by qualified professionals. The installers must inform end–users (consumers) the aforesaid information accordingly. The word "module" or "PV module" used in this manual refers to one or more CS-series solar modules.

This manual is only valid for the module types CS1V-MS, CS1VL-MS, CS1U-MS, CS1H-MS, CS1K-MS, CS3U-P, CS3U-MS, CS3K-P, CS3K-MS, CS6A-P, CS6A-M, CS6V-P, CS6V-M, CS6K-P, CS6K-M, CS6K-MS, CS6V-MS, CS6VL-MS, CS6A-MS, CS6U-P, CS6U-M, CS3W-P and CS3L-P.

Please retain this manual for future reference. We recommend checking **www.canadiansolar.com** regularly for the most updated version.

This installation manual is applicable for EU and EEA countries only.

1.1
INSTALLATION MANUAL DISCLAIMER

The information contained in this manual is subject to change by Canadian Solar Inc. without prior notice. Canadian Solar Inc. gives no warranty of any kind whatsoever, either explicitly or implicitly, with respect to the information contained herein.

In the event of any inconsistency among different language versions of this document, the English version shall prevail. Please refer to our product lists and documents published on our website at: http://www.canadiansolar.com as these lists are updated on a regular basis.

1.2
LIMITATION OF LIABILITY

Canadian Solar Inc. shall not be held responsible for damages of any kind, including – without limitation – bodily harm, injury or damage to property, in connection with handling PV modules, system installation, or compliance or non-compliance with the instructions set forth in this manual.

2.0
SAFETY PRECAUTIONS

Warning
Before attempting to install, wire, operate and / or service the module and other electrical equipment, all instructions should be read and understood. PV module connectors pass direct current (DC) when exposed to sunlight or other light sources. Contact with electrically active parts of the module, such as terminals, can result in injury or death, irrespective of whether or not the module and the other electrical equipment have been connected.

AVERTISSEMENT:
Toutes les instructions devront être lues et comprises avant de procéder à l'installation, le câblage, l'exploitation et/ou l'entretien des panneaux. Les interconnexions des panneaux conduisent du courant continu (CC) lorsque le panneau est exposé à la lumière du soleil ou à d'autres sources lumineuses. Tout contact avec des éléments sous tension du panneau tels que ses bornes de sortie peut entraîner des blessures ou la mort, que le panneau soit connecté ou non.

GENERAL SAFETY

- All modules must be installed by licensed electricians in accordance to the applicable electrical codes such as, the latest National Electrical Code (USA) or Canadian Electric Code (Canada) or other national or international applicable electrical codes.

Protective clothing (non-slip gloves, clothes, etc.) must be worn during installation to prevent direct contact with 30 V DC or greater, and to protect hands from sharp edges.

Prior to installation, remove all metallic

jewelry to prevent accidental exposure to live circuits.

When installing modules in light rain, morning dew, take appropriate measures to prevent water ingress into the connector.

Do not allow children or unauthorized persons near the installation site or storage area of modules.

- Do not install modules in strong wind.
- Use electrically insulated tools to reduce the risk of electric shock.
- If the disconnects and Over Current Protection Device (OCPD)'s cannot be opened or the inverter cannot be powered down, cover the fronts of the modules in the PV array with an opaque material to stop the production of electricity when installing or working on a module or wiring.
- **Do not** use or install damaged modules.
- Contact with module surfaces or frames may cause electric shock if the front glass is broken or the backsheet is torn.
- The PV module does not contain any serviceable parts. Do not attempt to repair any part of the module.
- Keep the junction box cover closed at all times.
- **Do not** disassemble a module or remove any module part.
- **Do not** artificially concentrate sunlight on a module.
- **Do not** connect or disconnect modules when current from the modules or an external source is present.

2.1 INFORMATION PURSUANT TO ART. 33 OF THE REACH REGULATION

Pursuant to Art. 33 of Regulation (EC) No 1907/2006 of the European Parliament and of the Council of 18 December 2006 concerning the Registration, Evaluation, Authorisation and Restriction of Chemicals (REACH), establishing a European Chemicals Agency, amending Directive 1999/45/EC and repealing Council Regulation (EEC) No 793/93 and Commission Regulation (EC) No 1488/94 as well as Council Directive 76/769/EEC and Commission Directives 91/155/EEC, 93/67/EEC, 93/105/EC and 2000/21/EC (the "REACH Regulation"), we inform you that our solar modules contain a Substance of Very High Concern ("SVHC") in a concentration above 0.1 % (weight by weight).

The coating of the ribbon of our solar modules contains lead (CAS no. 7439-92-1). Under normal or reasonably foreseeable conditions of use, exposure to the lead that is contained in our solar modules can be excluded. However, a release of, and exposure to, lead can take place (i) when the different components of the solar modules are disassembled, in particular for recycling purposes, and (ii) in instances of fire.

Lead may damage fertility or the unborn child, causes damage to organs through prolonged or repeated exposure, is very toxic to aquatic life with long lasting effects, may cause cancer, is very toxic to aquatic life, and may cause harm to breast-fed children.

Therefore, recycling and all other types of comparable disassembly of the solar modules have to be performed by a qualified waste management company, in compliance with national and local waste management regulations.

In the instance of fire, please keep away from the fire, and call the local fire brigade.

3.0 MECHANICAL / ELECTRICAL SPECIFICATIONS

Module electrical ratings are measured under Standard Test Conditions (STC) of 1000 W/m^2 irradiance, with an AM1.5 spectrum, and a cell temperature of 25°C. Detailed electrical and mechanical characteristics of Canadian Solar Inc. crystalline silicon PV modules can be found in Annex C (Mechanical and Electrical Ratings) on **www.canadiansolar.com.** Main electrical characteristics at STC are also stated on each module label. Please refer to the datasheet or the product nameplate for the maximum system voltage.

Under certain conditions, a module may produce more current or voltage than under its Standard Test

Condition's rated power. As a result, the module short-circuit current under STC should be multiplied by 1.25, and a correction factor should be applied to the open-circuit voltage (see Table 1 below), when determining component ratings and capacities. Depending on your local regulations, an additional 1.25 multiplier for the short-circuit current (giving a total multiplier of 1.56) may be applicable when sizing conductors and fuses.

Table 1: Low temperature correction factors for open-circuit voltage

Lowest Expected Ambient Temperature (°C/°F)	Correction Factor
24 to 20 / 76 to 68	1.02
19 to 15 / 67 to 59	1.04
14 to 10 / 58 to 50	1.06
9 to 5 / 49 to 41	1.08
4 to 0 / 40 to 32	1.10
-1 to -5 / 31 to 23	1.12
-6 to -10 / 22 to 14	1.14
-11 to -15 / 13 to 5	1.16
-16 to -20 / 4 to -4	1.18
-21 to -25 / -5 to -13	1.20
-26 to -30 / -14 to -22	1.21
-31 to -35 / -23 to -31	1.23
-36 to -40 / -32 to -40	1.25

Alternatively, a more accurate correction factor for the open-circuit voltage can be calculated using the following formula:

$$C_{VOC} = 1-\alpha_{Voc} \times (25 - T)$$

T is the lowest expected ambient temperature at the system installation site

α_{Voc} (%/°C) is the voltage temperature coefficient of the selected module (refer to corresponding datasheet)

Electrical calculations and design must be performed by competent engineer or consultant.

4.0 UNPACKING AND STORAGE

NOTICE

PRECAUTIONS

- Modules should be stored in a dry and ventilated environment to avoid direct sunlight and moisture. If modules are stored in an uncontrolled environment, the storage time should be less than 3 months and extra precautions should be taken to prevent connectors from being exposed to moisture or sunlight, like using connector endcaps.
- Unpack module pallets carefully, following the steps shown on the pallet. Unpack, transport and store the modules with care.
- Modules must always be unpacked and installed by two people. Always use both hands when handling modules.

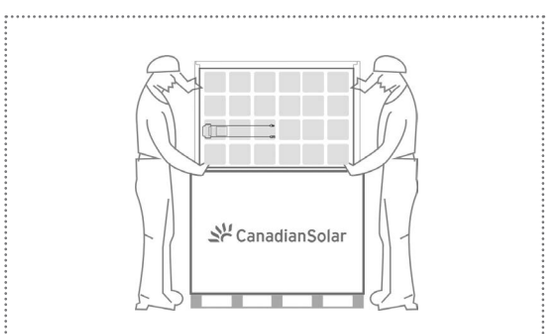

- **Do not** stand, step, walk and / or jump on modules under any circumstances. Localized heavy loads may cause severe micro-cracks at cell level, which in turn may compromise module reliability and void Canadian Solar Inc's warranty.

- **Do not** support the backsheet when handling or installing the module.
- **Do not** carry modules on your head.
- **Do not** drop or place objects (such as tools) on the modules.
- **Do not** lift modules by their wires or junction box, lift them by the frame.
- Stacks of modules should contain no more than 12 modules, and the frames should be aligned.
- **Do not** place excessive loads on the module or twist the module frame.
- **Do not** use sharp instruments on the modules. Particular care should be taken to avoid module backsheets being damaged by sharp objects, as scratches may directly affect product safety.
- **Do not** leave modules unsupported or unsecured.
- **Do not** change the wiring of bypass diodes.
- Keep all connectors clean and dry at all times.
- **Do not** expose the modules and its connectors to any unauthorized chemical substance (e.g. oil, lubricant, pesticide, etc.).

PRODUCT IDENTIFICATION

- Each module has three identical barcodes (one in the laminate under the front glass, the second on the rear side of the module and the third on the frame) that act as a unique identifier. Each module has a unique serial number containing 13 (pre March 2013) or 14 (post March 2013) digits.
- A nameplate is also affixed to the rear of each module. This nameplate specifies the model type, as well as the main electrical and safety characteristics of the module.

5.0 MODULE INSTALLATION

PRECAUTIONARY MEASURES AND GENERAL SAFETY

- Prior to installing modules please obtain information about any requirements and necessary approvals for the site, installation and inspection from the relevant authorities.
- Check applicable building codes to ensure that the construction or structure (roof, facade, support, etc.) can bear the module system load.
- CS-series solar modules have been qualified for Application Class A (equivalent to Safety Class II requirements). Modules rated under this class should be used in systems operating at voltage above 50 V or power above 240 W, where general contact access is anticipated.
- Canadian Solar Inc. modules have been certified as Type 1 or Type 4 according to UL 1703 and Class C according to IEC 61730-2, please refer to the datasheet or the product nameplate for the detailed types.
- Consult your local authority for guidelines and requirements for building or structural fire safety.

UL 1703 SYSTEM FIRE RATING REQUIREMENTS

- A photovoltaic systems composed of UL 1703 certified modules mounted on a UL 2703 certified mounting system should be evaluated in combination with roof coverings in accordance with UL 1703 standard, with respect to meeting the same fire classification as the roof assembly.
- Mounting systems with a System Fire Class Rating (Class A, B or C), tested in conjunction with fire rated “Type 1” or “Type 4” rated modules, are considered acceptable for use with Canadian Solar Inc. modules, provides the mounting system does not violate any other requirements of this manual.

EN-Rev IM/GN-AM-EU/1.8 Copyright © September, 2019. Canadian Solar Inc.

- Any mounting system limitations on inclination or accessories required to maintain a specific System Fire Class Rating should be clearly specified in the installation instructions and UL 2703 certification of the mounting system supplier.

- When installing modules, ensure the supporting roof has a fire resistant roof covering rated for the application.

- The fire rating for this module is only valid when the product is installed as specified in the mechanical mounting instructions.

ENVIRONMENTAL CONDITIONS

- The module is intended for use in general open-air climates, as defined in IEC 60721-2-1: Classification of environmental conditions Part-2-1: Environmental conditions appearing in nature - Temperature and humidity.

- Please consult the Canadian Solar Inc. technical support department for more information on the use of modules in special climates, , such as an altitude greater than 2000 m.

Do not install modules near open flames or flammable materials.

Do not immerse modules in water or constantly expose modules to water (either fresh or salt) (i.e. from fountains, sea spray).

- Exposing modules to salt (i.e. marine environments) or sulfur (i.e. sulfur sources, volcanoes) incurs the risk of module corrosion.

- **Do not** expose modules and their connectors to any unauthorized chemical substances (e.g. oil, lubricant, pesticide, etc.), as modules may incur damages.

- Failure to comply with these instructions will void Canadian Solar Inc. limited warranty.

INSTALLATION REQUIREMENTS

- Ensure that the module meets the general technical system requirements.

- Ensure that other system components do not damage the module mechanically or electrically.

- Modules can be wired in series to increase voltage or in parallel to increase current. To connect modules in series, connect the cables from the positive terminal of one module to the negative terminal of the next module. To connect in parallel, connect the cables from the positive terminal of one module to the positive terminal on the next module.

- The quantity of bypass diodes in the module's junction box may vary depending on the model series.

- Only connect the quantity of modules that corresponds to the voltage specifications of the inverters used in the system. In addition modules should not be connected together to create a voltage higher than the maximum permitted system voltage stated on the module nameplate, even under the worst local temperature conditions (see Table 1 for the correction coefficients that apply to open-circuit voltage).

- A maximum of two strings can be connected in parallel without the need to incorporate an over-current protection device (fuses, etc.) in series within each string. Three or more strings can be connected in parallel if an appropriate, certified over-current protection device is installed in series within each string.

- For high power density modules such as CS1 series intended to be used on rooftop applications, in agreement with IEC 62548: 2016 Photovoltaic (PV) arrays design requirements, blocking diodes should be used in each PV array module string as exclusive mean of protection against reverse currents where three or more strings are connected in parallel. Where permitted by your local electrical code, blocking diodes can also be used for overcurrent protection, in place of fuses or other OCPD devices.

- Only modules with similar electrical outputs should be connected in the same string to avoid or minimize mismatch effects in arrays.

- To minimize risk in the event of an indirect lightning strike, avoid forming loops with the wiring when designing the system.

- The recommended maximum series fuse rating is stated in a table in the Annex C.

- Modules should be safely fixed to bear all expected loads, including wind and snow loads.

- A minimum clearance of 6.5 mm (0.25 in) between modules is required to allow for thermal expansion of the frames.

- The small drainage holes on the underside of the module must not be blocked.

OPTIMUM ORIENTATION AND TILT

- To maximize your annual yield, find out the optimum orientation and tilt for PV modules in your region. The highest yields are achieved when sunlight shines perpendicularly onto the PV modules.

AVOID SHADING

- Even minor partial shading (e.g. from dirt deposits) reduces yields. A module can be considered to be unshaded if its entire surface is free from shading all year round. Sunlight should be able to reach the module even on the shortest day of the year.

- Constant shading conditions can affect module service lifetime, due to accelerated ageing of the encapsulation material and thermal stress on the bypass diodes.

RELIABLE VENTILATION

- Sufficient clearance (at least 10 cm (3.94 in)) between the module frame and the mounting surface is required to allow cooling air to circulate around the back of the module. This also enables condensation or moisture to dissipate.

- According to UL 1703, any other specific clearance required for maintaining a system fire rating should prevail. Detailed clearance requirements pertaining to system fire ratings must be provided by your racking supplier.

5.1 MODULE WIRING

CORRECT WIRING SCHEME

- Cable management scheme should be reviewed and approved by the EPC contractor, in particular required cable lengths should be cross-checked considering the specificities of the tracker structure like bearing house gaps. If longer cable or additional jumper cable is requested, please contact Canadian Solar's sales representative in advance.

- Ensure that the wiring is correct before starting up the system. If the measured open circuit voltage (Voc) and short-circuit current (Isc) differ substantially from the specifications, this indicates that there is a wiring fault.

- When modules have been pre-installed but the system has not been connected to the grid yet, each module string should be kept under open-circuit conditions and proper actions should be taken to avoid dust and moisture penetration inside the connectors.

- For CS3U, CS3K, CS3W and CS3L series modules, Canadian Solar Inc. offers optional cable specifications to match various system configurations. Recommended system cable schemes are shown in Table 2 below:

Table 2: System Cable Scheme for CS3U, CS3K, CS3W and CS3L modules

Module types	Standard cables	Optional cables
CS3U-P, CS3U-MS, CS3K-P, CS3K-MS, CS3W-P, CS3L-P	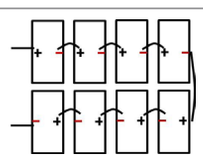	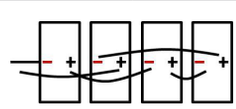 Leap-frog
	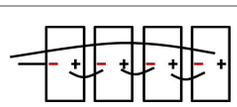	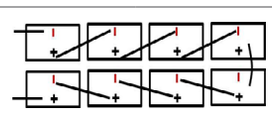

- For CS1V, CS1VL, CS1H and CS1K series modules, recommended system cable schemes are shown in Table 3:

Table 3: System Cable Scheme for CS1V, CS1VL, CS1H and CS1K modules

Module types	Standard cables
CS1V-MS, CS1VL-MS, CS1H-MS, CS1K-MS	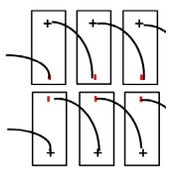 Rooftop portrait two rows installation
	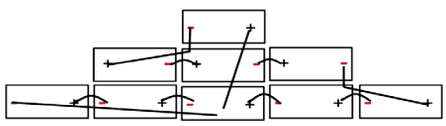 Trapezoidal rooftop landscape installation
	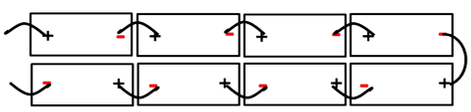 Rectangle rooftop landscape installation
	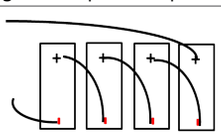 Rooftop portrait one row installation

- For CS1U series modules, recommended system cable schemes are shown in Table 4:

Table 4: System Cable Scheme for CS1U modules

Module types	Standard cables
CS1U-MS	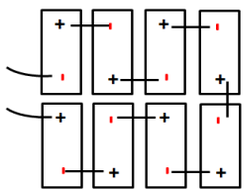 Portrait installation Note: Adjacent two modules (left to right) need to be rotated 180 degrees
	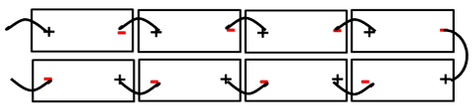 Landscape installation Note: Adjacent two modules (up and down) need to be rotated 180 degrees
	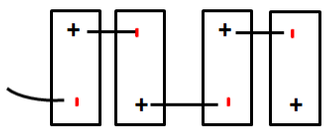 Tracker one by one
	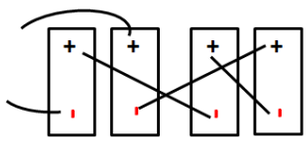 Tracker for leapfrog
	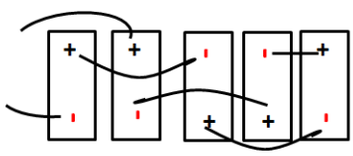 Tracker for leapfrog

The maximum distance between two adjacent module frames should be within 50 mm (1.96in) for side with mounting clamps, and within 25 mm (0.98in) for side without mounting clamps, in order to meet system cable scheme.

CORRECT CONNECTION OF PLUG CONNECTORS

- Make sure that all connections are safe and properly mated. The PV connector should not be subjected to stress from the exterior. Connectors should only be used to connect the circuit. They should never be used to turn the circuit on and off.

- Connectors are not waterproof when unmated. When installing modules, connector should be connected to each other as soon as possible or appropriate measures should be taken to avoid moisture and dust penetrating into the connector.

- Do not clean or precondition the connectors using lubricants or any unauthorized chemical substance.

USE OF SUITABLE MATERIALS

- Only use dedicated solar cable and suitable connectors (wiring should be sheathed in a sunlight-resistant conduit or, if exposed, should be sunlight-resistant itself) that meet local fire, building and electrical regulations. Please ensure that all wiring is in perfect electrical and mechanical condition.

- Installers may only use single-conductor cable listed and labeled as USE-2 or PV wire which is 90°C wet rated in North America, and single conductor cable, 2.5-16 mm² (5-14 AWG), 90°C wet rated in other areas (i.e. TUV 2PfG1169 or EN50618 approved), with proper insulation which is able to withstand the maximum possible system open-circuit voltage.

- Only copper conductor material should be used. Select a suitable conductor gauge to minimize voltage drop and ensure that the conductor ampacity complies with local regulations (i.e. NEC 690.8(D)).

CABLE AND CONNECTOR PROTECTION

- Secure the cables to the mounting system using UV-resistant cable ties. Protect exposed cables from damage by taking appropriate precautions (e.g. placing them inside a metallic raceway like EMT conduit). Avoid exposure to direct sunlight.

- A minimum bending radius of 60 mm (2.36 in) is required when securing the junction box cables to the racking system.

- Do not place connectors in locations where water could easily accumulate.

5.2 GROUNDING

- For grounding requirements in North America, a module with exposed conductive parts is considered to comply with UL 1703 only when it is electrically grounded in accordance with both the instructions presented below and the requirements of the National Electrical Code. Any grounding means used with Canadian Solar Inc. modules should be NRTL certified to UL 467 and UL 2703 standards. Please consult our technical service team for the formal approval process.

- For grounding requirements in other areas, although the modules are certified to Safety Class II, we recommend them to be grounded and that module installation should comply with all applicable local electrical codes and regulations.

- Grounding connections should be installed by a qualified electrician.

- Connect module frames together using adequate grounding cables: we recommend using 4-14 mm² (AWG 6-12) copper wire. Holes provided for this purpose are identified with a grounding symbol ⏚ (IEC 61730-1). All conductive connection junctions must be firmly fixed.

- Do not drill any extra ground holes for convenience this will void the modules warranty.

- All bolts, nuts, flat washers, lock washers and other relevant hardware should be made of stainless steel, unless otherwise specified.

- Canadian Solar Inc. does not provide grounding hardware.

- One grounding method is recommended for Canadian Solar Inc. standard modules, as described below. For alternative grounding methods, please refer to Annex B (Alternative Grounding Methods) on the website (www.canadiansolar.com). It is not possible to use standard grounding methods for certain module ranges. Please refer to Annex B for

more details.

GROUNDING METHOD:
BOLT + TOOTHED NUT + CUP WASHER.

1. To fix the wire between the flat washer and cup washer, place the cup washer (concave side up) between the frame and the wire.

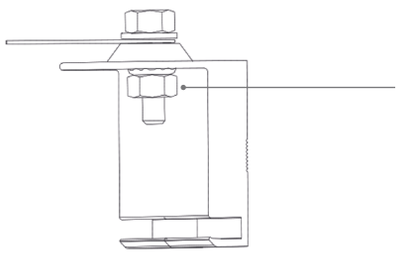

2. Then tighten the bolt using the toothed nut.

- A grounding kit containing an M5 (3/16") SS cap bolt, an M5 (3/16") SS flat washer, an M5 (3/16") SS cup washer, and an M5 (3/16") SS nut (with teeth) is used to attach copper grounding wire to a pre-drilled grounding hole on the frame (see image below).

- Place the wire between the flat washer and the cup washer. Ensure that the cup washer is positioned between the frame and the wire with the concave side up to prevent galvanic corrosion. Tighten the bolt securely using the SS toothed nut. A wrench may be used to do this. The tightening torque is 3-7 Nm (2.2-5.2 ft-lbs).

6.0 MOUNTING INSTRUCTIONS

The applicable regulations pertaining to work safety, accident prevention and securing the construction site must be observed. Workers and third party personnel shall wear or install fall arrest equipment. Any third party need to be protected against injuries and damages.

- The mounting design must be certified by a registered professional engineer. The mounting design and procedures must comply with all applicable local codes and requirements from all relevant authorities.

- The module is considered to be in compliance with UL 1703 and IEC 61215 only when the module is mounted in the manner specified by the mounting instructions included in this installation manual.

- Any module without a frame (laminate) shall not be considered to comply with the requirements of UL 1703 unless the module is mounted with hardware that has been tested and evaluated with the module under this standard or by a field inspection certifying that the installed module complies with the requirements of UL 1703.

- Canadian Solar Inc. does not provide mounting hardware.

- Standard modules can be mounted onto a support structure using one of several approved methods. One of such methods is described below. For details of other mounting methods and the methods recommended by Canadian Solar Inc. for special module ranges, please refer to the Annex A (Alternative Mounting Methods) on our website (www.canadian-solar.com). For information about other installation methods, please contact your local representative. Failure to use a recognized installation method will void the Canadian Solar Inc. warranty.

- Use appropriate corrosion-proof fastening materials. All mounting hardware (bolts, spring washers, flat washers, nuts) should be hot dip galvanized or stainless steel.

- Use a torque wrench for installation.

- Do not drill additional holes or modify the module frame. Doing so will void the warranty.

- Standard modules can be installed in either landscape or portrait orientations. Refer to the detailed instructions for further guidance. Please note that in areas with heavy snowfall (> 2400 Pa) further countermeasures such the use of additional support bars should be considered to avoid snow loads damaging the lowest row of modules.

- In cases where an additional support bar is

recommended to improve both mechanical stability and long-term module performance, we recommend selecting a sufficiently resistant material. Canadian Solar Inc. recommends bars with a minimum thickness of 50 mm (1.97 in). The support bar centerline should be positioned within 100 mm (3.94 in) of the side frame centerline (slight shifts may be necessary to access module grounding holes).

- The loads described in this manual correspond to test loads. For installations complying with IEC 61215-2: 2016 and UL 1703, a safety factor of 1.5 should be applied for calculating the equivalent maximum authorized design loads. Project design loads depend on construction, applicable standards, location and local climate. Determination of the design loads is the responsibility of the racking suppliers and / or professional engineers. For detailed information, please follow local structural code or contact your professional structural engineer.

6.1 MOUNTING METHOD: BOLTING

- This mounting method has been qualified by Canadian Solar Inc. as well as certified by VDE. and CSA.

- Modules should be bolted to supporting structures through the mounting holes in the rear frame flanges only.

- Each module must be securely fastened at a minimum of 4 points on two opposite sides.

  M8 X 1.25 - Grade 8.8 (5/16”-18 Grade B7) galvanized or A2-70 stainless steel bolt and nut should be used.

  The yield strength of bolt and nut should not be less than 450 MPa.

- Tightening torques should be 17~23 Nm (12.5~17.0 ft-lbs) respectively for M8 (5/16”-18) coarse thread bolts, depending on bolt class.

- In areas with heavy wind loads, additional mounting points should be used. The system designer and the installer are responsible for correctly calculating the loads and ensuring that the supporting structure meets all the applicable requirements.

Mounting method: Bolting

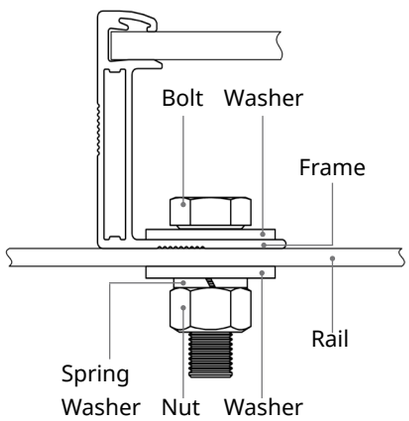

- Modules should be bolted at the following hole locations depending on the configuration and loads:

Table 5: Approved bolting methods

Bolting on short frame side using four standard mounting holes. Mounting rails run perpendicularly to the long frame side. An additional support bar should be placed below the module as shown below. 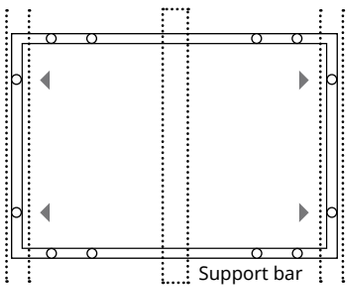 Maximum Load: Uplift load ≤ 2400 Pa Downforce load ≤ 5400 Pa Compatible module types: CS6A-P, CS6A-M and CS6A-MS	Bolting on short frame side using four standard mounting holes. Mounting rails run parallel to the long frame side. 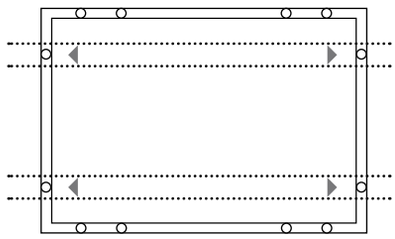 Maximum Load: Uplift load ≤ 2400 Pa Downforce load ≤ 2400 Pa Compatible module types: CS6A-P, CS6A-M and CS6A-MS
Bolting on long frame side using four innermost mounting holes. Mounting rails run perpendicularly to the long frame side. 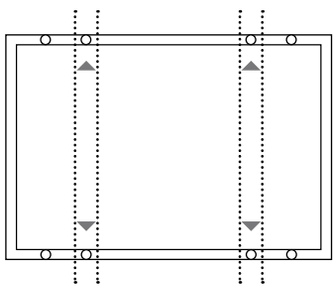 Maximum Load: Uplift load ≤ 2400 Pa Downforce load ≤ 5400 Pa Compatible module types: CS1V-MS, CS1VL-MS, CS3K-P, CS3K-MS, CS6A-P, CS6A-M, CS6V-P, CS6V-M, CS6K-P, CS6K-M, CS6K-MS, CS6V-MS, CS6VL-MS and CS6A-MS	Bolting on long frame side using four innermost mounting holes. Mounting rails run parallel to the long frame side. 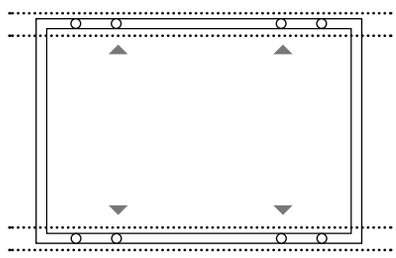 Maximum Load: Uplift load ≤ 2400 Pa Downforce load ≤4000 Pa Compatible module types: CS1V-MS, CS1VL-MS, CS3K-P, CS3K-MS, CS6A-P, CS6A-M, CS6A-MS, CS6V-P, CS6V-M, CS6V-MS, CS6K-P, CS6K-M, CS6K-MS
Bolting on long frame side using four middle mounting holes. Mounting rails run perpendicularly to the long frame side. 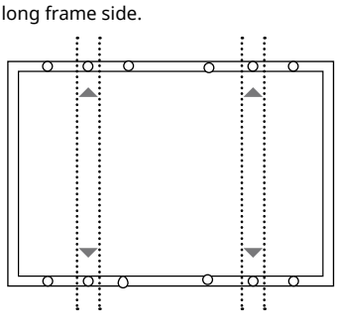 Maximum Load: Uplift load ≤ 2400 Pa Downforce load ≤ 5400 Pa Compatible module types: CS3U-P, CS3U-MS, CS6U-P, CS6U-M and CS3W-P	Bolting on long frame side using four middle mounting holes. Mounting rails run parallel to the long frame side. 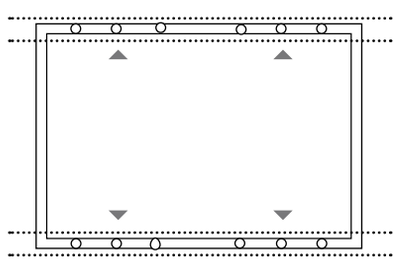 Maximum Load: Uplift load ≤ 2400 Pa Downforce load ≤5400 Pa Compatible module types: CS3U-P, CS3U-MS, CS6U-P and CS6U-M

EN-Rev IM/GN-AM-EU/1.8 Copyright © September, 2019. Canadian Solar Inc.

Bolting on long frame side using four innermost mounting holes. Mounting rails run perpendicularly to the long frame side.

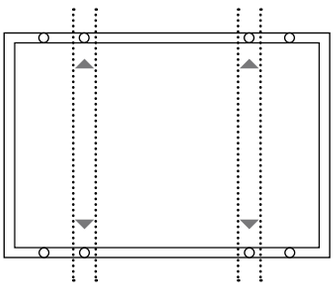

Maximum Load:
Uplift load ≤ 2400 Pa
Downforce load ≤ 5400 Pa

Compatible module types: CS3L-P, CS1H-MS and CS1K-MS

Notice: when the modules need to be installed in heavy snow area, please inform Canadian Solar Inc.'s technical support department in writing for advices. Failure to follow this notice may violate the warranty.

Bolting on long frame side using four middle mounting holes. Mounting rails run perpendicularly to the long frame side.

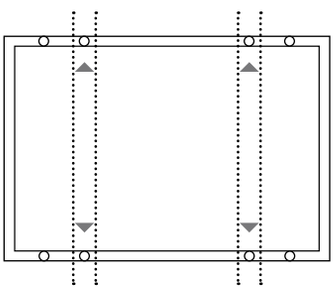

Maximum Load:
Uplift load ≤ 2400 Pa
Downforce load ≤ 5400 Pa

Compatible module types: CS1U-MS

Notice: when the modules need to be installed in heavy snow area, please inform Canadian Solar Inc.'s technical support department in writing for advices. Failure to follow this notice may violate the warranty.

7.0 MAINTENANCE

- **Do not** make modifications to any components of the PV module (diode, junction box, plug connectors or others).

- Regular maintenance is required to keep modules clear of snow, bird droppings, seeds, pollen, leaves, branches, dirt spots, and dust.

- Modules with sufficient tilt (at least 15°), generally may not require cleaning (rain will have a self-cleaning effect). If the module has become soiled, wash with water and a non-abrasive cleaning implement (sponge) during the cool part of the day. Do not scrape or rub dry dirt away, as this may cause micro scratches.

- Snow should be removed using a soft brush.

- Periodically inspect the system to check the integrity of all wiring and supports.

- To protect against electric shock or injury, electrical or mechanical inspections and maintenance should be performed by qualified personnel only.

- Please refer to Annex D (Module Cleaning Guide) for additional information on this topic.

EN-Rev IM/GN-AM-EU/1.8 Copyright © September, 2019. Canadian Solar Inc.

ANNEX A: ALTERNATIVE MOUNTING METHODS

All the basic requirements of the main installation manual should apply to the alternative mounting methods, unless otherwise specified.

The loads described in this manual corresponds to test loads. For installations complying with IEC 61215-2: 2016 and UL 1703, a safety factor of 1.5 should be applied for calculating the equivalent maximum authorized design loads.

Project design loads depend on construction, applicable standards, location and local climate. Determination of the design loads is the responsibility of the racking suppliers or professional engineers. For detailed information, please follow local structural code or contact your professional structural engineer.

MOUNTING METHOD A CLAMPING

- The mounting method has been qualified by Canadian Solar Inc. as well as certified by VDE and CSA.
- Top or bottom clamping methods will vary and are dependent on the mounting structures. Please follow the mounting guidelines recommended by the mounting system supplier.
- Each module must be securely fastened at a minimum of four points on two opposite sides. The clamps should be positioned symmetrically. The clamps should be positioned according to the authorized position ranges defined in table A.
- Install and tighten the module clamps to the mounting rails using the torque stated by the mounting hardware manufacturer. M8 X 1.25 (5/16") bolt and nut are used for this clamping method.
- Tightening torques should be within 17~23 Nm (12.5~17.0 ft-lbs) for M8 (5/16") coarse thread bolts, depending on the bolt class. For the bolt grade, the technical guideline from the fastener suppliers should be followed. Different recommendations from specific clamping hardware suppliers should prevail.
- The system designer and installer are responsible for load calculations and for proper design of support structure.
- Canadian Solar Inc.'s warranty may be void in cases where improper clamps or unsuitable installation methods are found. When installing inter-modules or end-type clamps, please take the following measures into account:

1. Do not bend the module frame.
2. Do not touch or cast shadows on the front glass.
3. Do not damage the surface of the frame (to the exception of the clamps with bonding pins).
4. Ensure the clamps overlap the module frame by at least 5 mm (0.2 in)
5. Ensure the clamps overlap length is at least 40 mm (1.57 in)
6. Ensure the clamp's thickness is at least 3 mm (0.12 in).

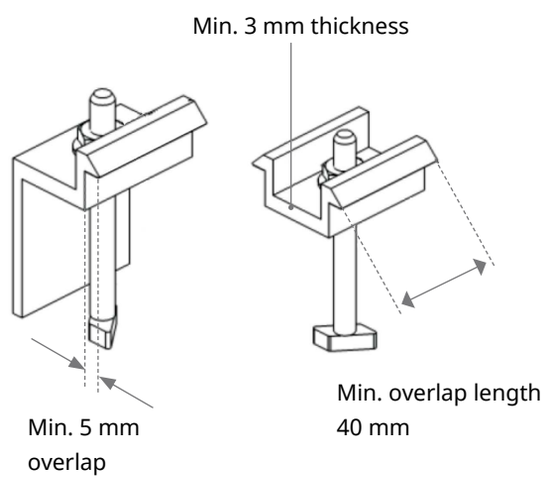

- Clamp material should be anodized aluminum alloy or stainless steel.
- Clamp positions are of crucial importance for the reliability of the installation. The clamp centerlines must only be positioned within the ranges indicated in table A, depending on the configuration and load.
- For configurations where the mounting rails run parallel to the frame, precautions should be taken to ensure the bottom flange of the module frame overlaps the rail by 15 mm (0.59 in) or more.

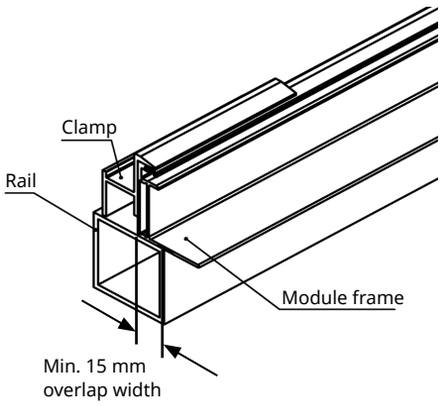

Table A
CS3U-P, CS3U-MS, CS6U-P and CS6U-M

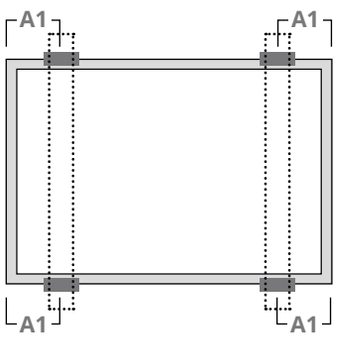 Use four clamps on the long side. Mounting rails run perpendicularly to the long side frame.	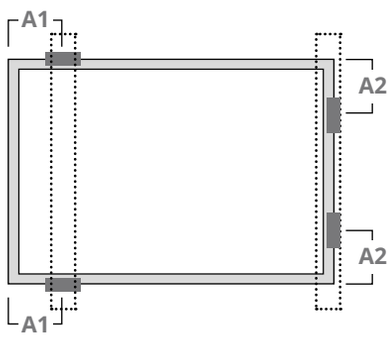 Use two clamps on the long side and two clamps on the short side. Mounting rails run perpendicular to the long side frame.
A1 range = (340 – 550) mm Maximum Load: Uplift load ≤ 2400 Pa Downforce load ≤ 2400 Pa	A1 range = (300 – 550) mm A2 range = (200 – 250) mm Maximum Load: Uplift load ≤ 2400 Pa Downforce load ≤ 2400 Pa
A1 range = (410 – 490) mm Maximum Load: Uplift load ≤ 3600 Pa Downforce load ≤ 5400 Pa	

EN-Rev IM/GN-AM-EU/1.8 Copyright © September, 2019. Canadian Solar Inc.

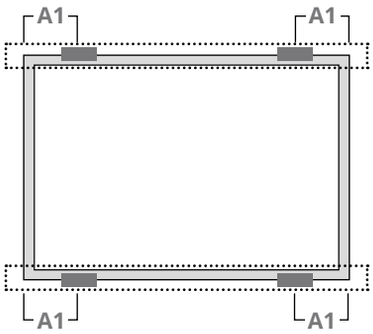

Use four clamps on the long side. Mounting rails run parallel to the long side frame.

A1 range = (410 – 490) mm
Maximum Load:
Uplift load ≤ 2400 Pa
Downforce load ≤ 5400 Pa

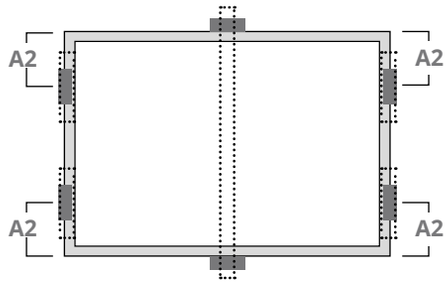

Use four clamps on the short side and two clamps on the long side. An additional support bar should be placed below the center of the module.

A2 range = (200 – 250) mm
Maximum Load:
Uplift load ≤ 2400 Pa
Downforce load ≤ 5400 Pa

CS1U-MS

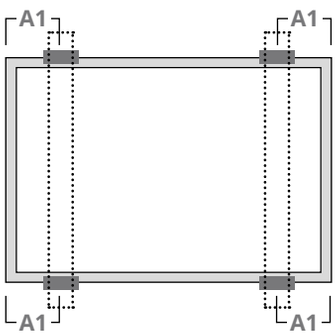

Use four clamps on the long side. Mounting rails run perpendicularly to the long side frame.

A1 range = (340 – 550) mm
Maximum Load:
Uplift load ≤ 2400 Pa
Downforce load ≤ 2400 Pa

A1 range = (410 – 490) mm
Maximum Load:
Uplift load ≤ 2400 Pa
Downforce load ≤ 5400 Pa

Notice: when the modules need to be installed in heavy snow area, please inform Canadian Solar Inc.'s technical support department in writing for advices. Failure to follow this notice may violate the warranty.

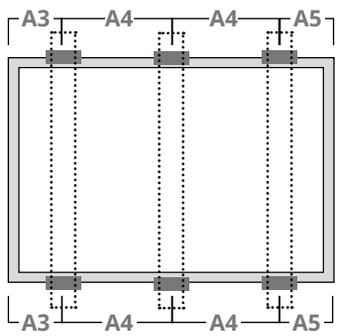

Use six clamps on the long side.
Mounting rails run perpendicularly to the long side frame.

A3 range = (250– 350) mm
A5 range = (250– 350) mm
Maximum Load:
Uplift load ≤ 2400 Pa
Downforce load ≤ 5400 Pa
Notice: This method is recommended for better reliability.

CS3K-P, CS3K-MS, CS6K-P, CS6K-M and CS6K-MS

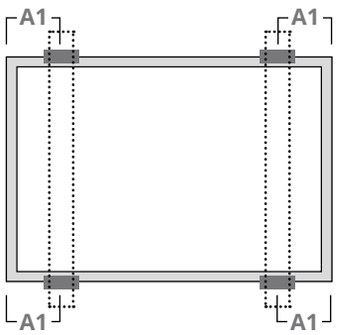

Use four clamps on the long side. Mounting rails run perpendicularly to the long side frame.

A1 range = (0 – 239) mm
Maximum Load:
Uplift load ≤ 2000 Pa
Downforce load ≤ 2000 Pa

A1 range = (240 – 330) mm
Maximum Load:
Uplift load ≤ 3600 Pa
Downforce load ≤ 5400 Pa

A1 range = (331 – 550) mm
Maximum Load:
Uplift load ≤ 2400 Pa
Downforce load ≤ 2400 Pa

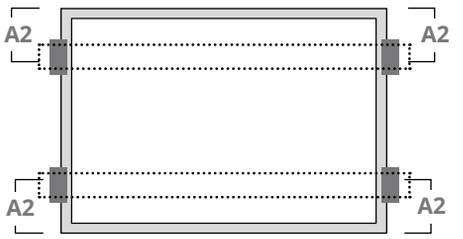

Use four clamps on the short side. Mounting rails run parallel to the long side frame.

A2 range = (200 – 250) mm
Maximum Load:
Uplift load ≤ 2000 Pa
Downforce load ≤ 2000 Pa

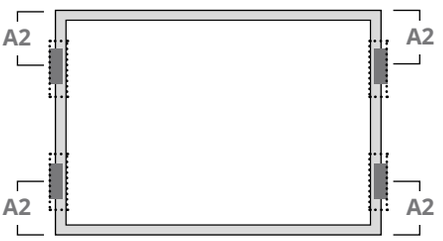

Use four clamps on the short side.

A2 range = (0 – 250) mm
Maximum Load:
Uplift load ≤ 2000 Pa
Downforce load ≤ 2000 Pa

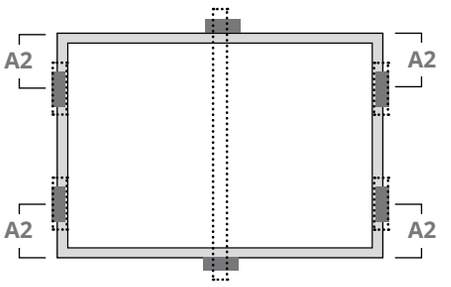

Use four clamps on the short side and two clamps on the long side. An additional support bar should be placed below the center of the module.

A2 range = (200 – 250) mm
Maximum Load:
Uplift load ≤ 2400 Pa
Downforce load ≤ 5400 Pa

EN-Rev IM/GN-AM-EU/1.8 Copyright © September, 2019. Canadian Solar Inc.

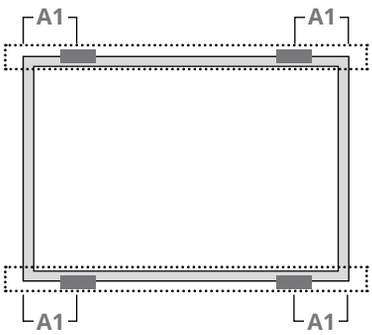

Use four clamps on the long side. Mounting rails run parallel to the long side frame.

A1 range = (240 – 330) mm
Maximum Load:
Uplift load ≤ 2400 Pa
Downforce load ≤ 4000 Pa

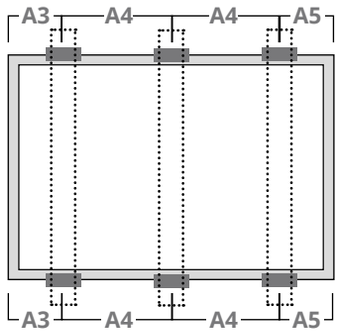

Use six clamps on the long side.
Mounting rails run perpendicularly to the long side frame.

A3 range = (80 –380) mm,
A5 range = (80 –380) mm
Maximum Load:
Uplift load ≤ 4000 Pa
Downforce load ≤ 6000 Pa

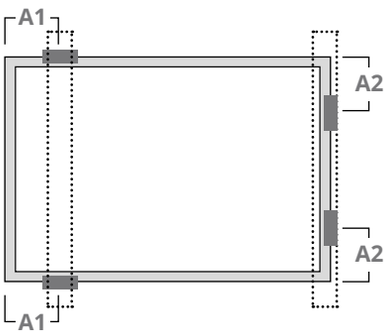

Use two clamps on the long side and two clamps on the short side.
Mounting rails run perpendicular to the long side frame.

A1 range = (100 – 550) mm
A2 range = (200 – 250) mm
Maximum Load:
Uplift load ≤ 2400 Pa
Downforce load ≤ 2400 Pa

CS3W-P

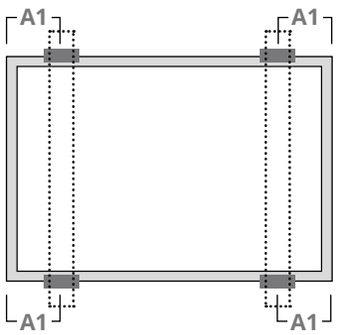

Use four clamps on the long side. Mounting rails run perpendicularly to the long side frame.

A1 range = (340 – 550) mm
Maximum Load:
Uplift load ≤ 2400 Pa
Downforce load ≤ 2400 Pa

A1 range = (410 – 490) mm
Maximum Load:
Uplift load ≤ 3600 Pa
Downforce load ≤ 5400 Pa

CS3L-P

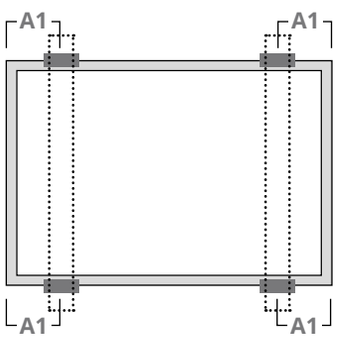

Use four clamps on the long side. Mounting rails run perpendicularly to the long side frame.

A1 range = (240 – 330) mm
Maximum Load:
Uplift load ≤ 3600 Pa
Downforce load ≤ 5400 Pa

Notice: when the modules need to be installed in heavy snow area, please inform Canadian Solar Inc.'s technical support department in writing for advices. Failure to follow this notice may violate the warranty.

A1 range = (331 – 550) mm
Maximum Load:
Uplift load ≤ 2400 Pa
Downforce load ≤ 2400 Pa

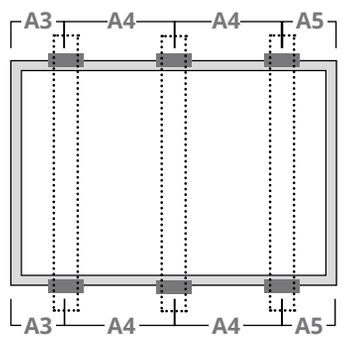

Use six clamps on the long side.
Mounting rails run perpendicularly to the long side frame.

A3 range = (140 – 440) mm,
A5 range = (140 – 440) mm
Maximum Load:
Uplift load ≤ 3600 Pa
Downforce load ≤ 5400 Pa

Notice: this method is recommended for better reliability.

EN-Rev IM/GN-AM-EU/1.8 Copyright © September, 2019. Canadian Solar Inc.

Rail-less clamping for CS3K-P, CS3K-MS, CS6K-P, CS6K-M, CS6K-MS

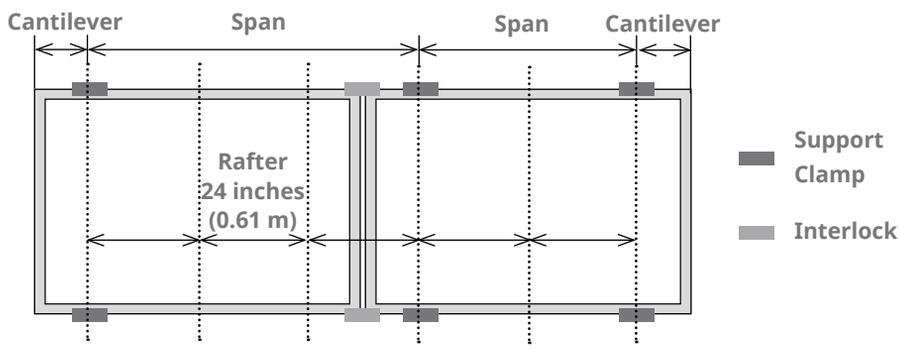

Landscape installation, clamping on long side frame.

Mounting Orientation	Max Span	Max Cantilever length	Downforce	Uplift
Landscape	72 inches (1.83 m)	24 inches (0.61 m)	2200 Pa	1400 Pa
	64 inches (1.63 m)	21.3 inches (0.54 m)	2400 Pa	1400 Pa
	48 inches (1.22 m)	16 inches (0.41 m)	3400 Pa	1800 Pa
	32 inches (0.81 m)	10.7 inches (0.27 m)	5400 Pa	2400 Pa

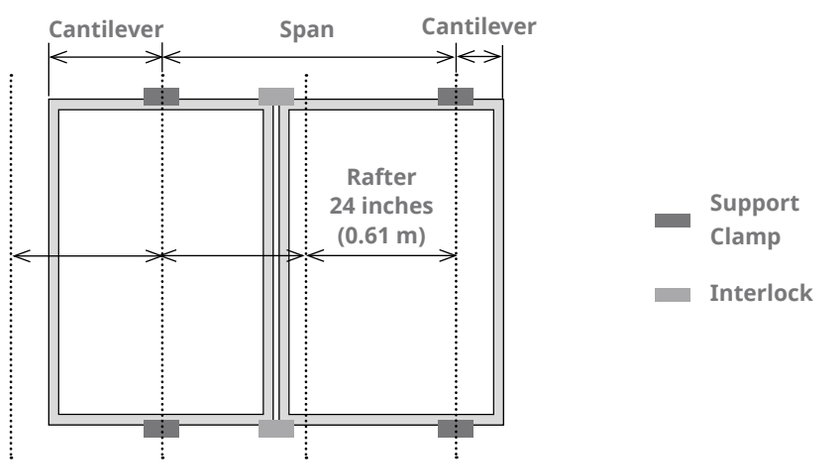

Portrait installation, clamping on short side frame.

Mounting Orientation	Max Span	Max Cantilever length	Downforce	Uplift
Portrait	48 inches (1.22 m)	16 inches (0.41 m)	1800 Pa	800 Pa
	32 inches (0.81 m)	10.7 inches (0.27 m)	1800 Pa	1200 Pa
	24 inches (0.61 m)	8 inches (0.2 m)	1800 Pa	1800 Pa

CS1K-MS and CS1H-MS

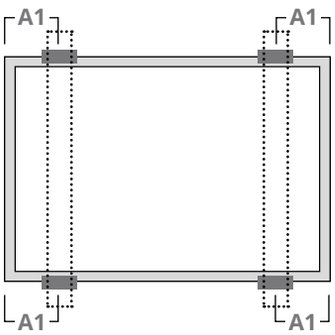

Use four clamps on the long side. Mounting rails run perpendicularly to the long side frame.

A1 range = (0 – 239) mm
Maximum Load:
Uplift load ≤ 2000 Pa
Downforce load ≤ 2000 Pa

A1 range = (240 – 550) mm
Maximum Load:
Uplift load ≤ 2400 Pa
Downforce load ≤ 2400 Pa

A1 range = (240 – 330) mm
Maximum Load:
Uplift load ≤ 2400 Pa
Downforce load ≤ 5400 Pa

Notice: when the modules need to be installed in heavy snow area, please inform Canadian Solar Inc.'s technical support department in writing for advices. Failure to follow this notice may violate the warranty.

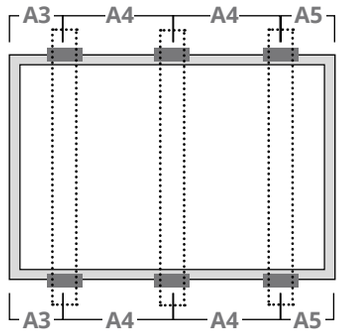

Use six clamps on the long side. Mounting rails run perpendicularly to the long side frame.

A3 range = (80 –380) mm
A5 range = (80 –380) mm
Maximum Load:
Uplift load ≤ 2400 Pa
Downforce load ≤ 5400 Pa
Notice: This method is recommended for better reliability.

CS6A-P, CS6A-M, CS6VL-MS and CS6A-MS

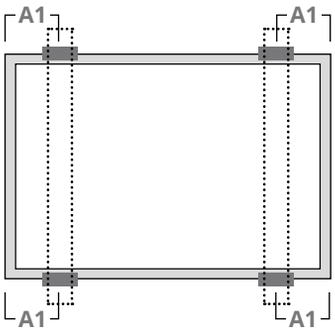

Use four clamps on the long side. Mounting rails run perpendicularly to the long side frame.

A1 range = (0 – 219) mm
Maximum Load:
Uplift load ≤ 2000 Pa
Downforce load ≤ 2000 Pa

A1 range = (220 – 440) mm
Maximum Load:
Uplift load ≤ 2400 Pa
Downforce load ≤ 2400 Pa

A1 range = (270 – 330) mm
Maximum Load:
Uplift load ≤ 2400 Pa
Downforce load ≤ 5400 Pa

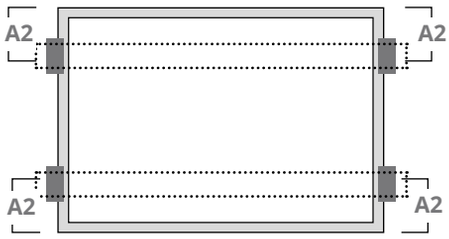

Use four clamps on the short side. Mounting rails run parallel to the long side frame.

A2 range = (200 – 250) mm
Maximum Load:
Uplift load ≤ 2400 Pa
Downforce load ≤ 2400 Pa

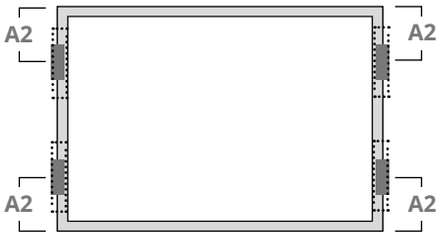

Use four clamps on the short side.

A2 range = (0 – 250) mm
Maximum Load:
Uplift load ≤ 2400 Pa
Downforce load ≤ 2400 Pa

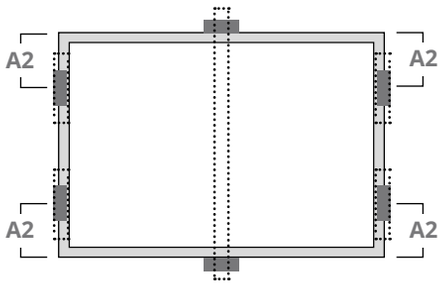

Use four clamps on the short side and two clamps on the long side. An additional support bar should be placed below the center of the module.

A2 range = (200 – 250) mm
Maximum Load:
Uplift load ≤ 2400 Pa
Downforce load ≤ 5400 Pa

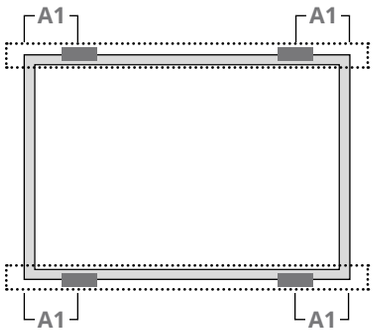

Use four clamps on the long side. Mounting rails run parallel to the long side frame.

A1 range = (270 – 330) mm
Maximum Load:
Uplift load ≤ 2400 Pa
Downforce load ≤ 4000 Pa

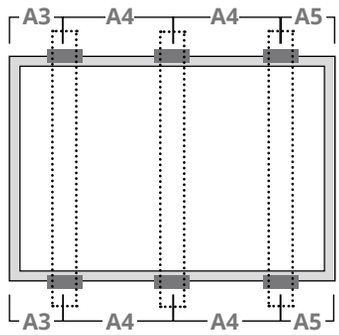

Use six clamps on the long side. Mounting rails run perpendicularly to the long side frame.

A3 range = (80 –380) mm
A5 range = (80 –380) mm
Maximum Load:
Uplift load ≤ 4000 Pa
Downforce load ≤ 6000 Pa

CS6V-P, CS6V-M and CS6V-MS

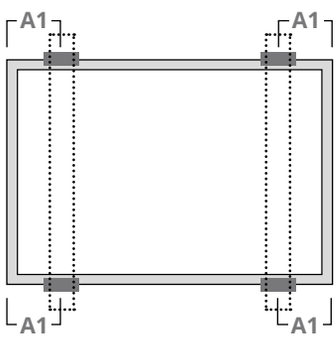

Use four clamps on the long side. Mounting rails run perpendicularly to the long side frame.

A1 range = (0 – 239) mm
Maximum Load:
Uplift load ≤ 2000 Pa
Downforce load ≤ 2000 Pa

A1 range = (240 – 550) mm
Maximum Load:
Uplift load ≤ 2400 Pa
Downforce load ≤ 2400 Pa

A1 range = (240 – 330) mm
Maximum Load:
Uplift load ≤ 2400 Pa
Downforce load ≤ 5400 Pa

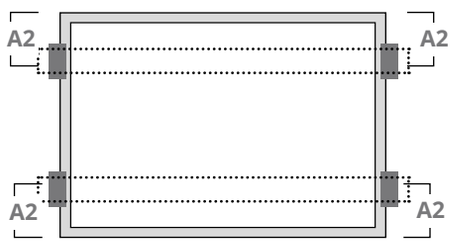

Use four clamps on the short side. Mounting rails run parallel to the long side frame.

A2 range = (170 – 210) mm
Maximum Load:
Uplift load ≤ 2400 Pa
Downforce load ≤ 2400 Pa

EN-Rev IM/GN-AM-EU/1.8 Copyright © September, 2019. Canadian Solar Inc.

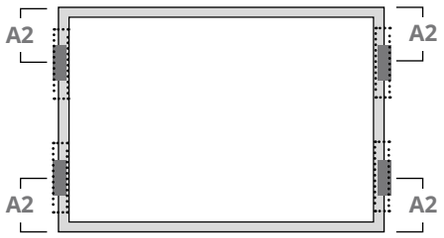

Use four clamps on the short side.

A2 range = (0 – 210) mm
Maximum Load:
Uplift load ≤ 2000 Pa
Downforce load ≤ 2000 Pa

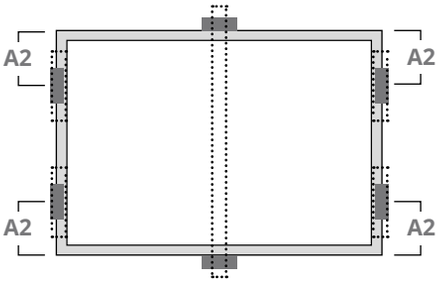

Use four clamps on the short side and two clamps on the long side. An additional support bar should be placed below the center of the module.

A2 range = (170 – 210) mm
Maximum Load:
Uplift load ≤ 2400 Pa
Downforce load ≤ 5400 Pa

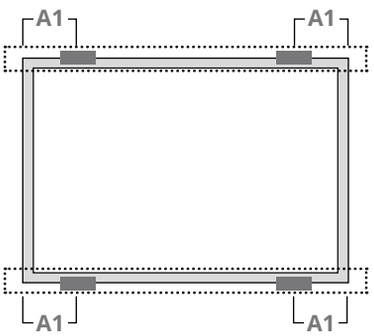

Use four clamps on the long side. Mounting rails run parallel to the long side frame.

A1 range = (240 – 330) mm
Maximum Load:
Uplift load ≤ 2400 Pa
Downforce load ≤ 4000 Pa

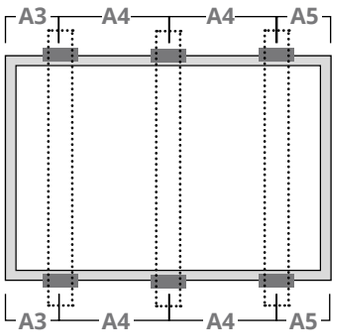

Use six clamps on the long side. Mounting rails run perpendicularly to the long side frame.

A3 range = (80 –380) mm
A5 range = (80 –380) mm
Maximum Load:
Uplift load ≤ 4000 Pa
Downforce load ≤ 6000 Pa

CS1V-MS

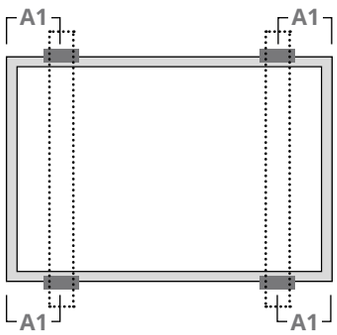

Use four clamps on the long side. Mounting rails run perpendicularly to the long side frame.

A1 range = (0 – 239) mm
Maximum Load:
Uplift load ≤ 2000 Pa
Downforce load ≤ 2000 Pa

A1 range = (240 – 550) mm
Maximum Load:
Uplift load ≤ 2400 Pa
Downforce load ≤ 2400 Pa

A1 range = (240 – 330) mm
Maximum Load:
Uplift load ≤ 2400 Pa
Downforce load ≤ 5400 Pa

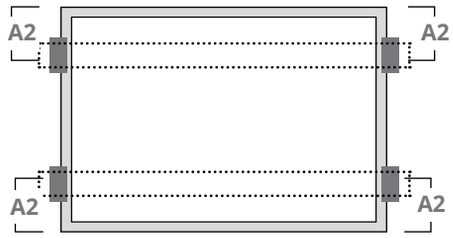

Use four clamps on the short side. Mounting rails run parallel to the long side frame.

A2 range = (170 – 210) mm
Maximum Load:
Uplift load ≤ 2400 Pa
Downforce load ≤ 2400 Pa

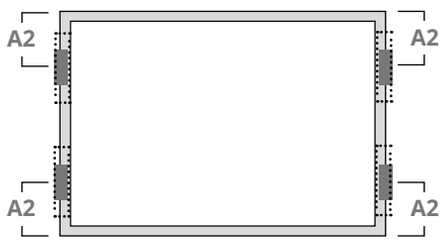

Use four clamps on the short side.

A2 range = (0 – 210) mm
Maximum Load:
Uplift load ≤ 2000 Pa
Downforce load ≤ 2000 Pa

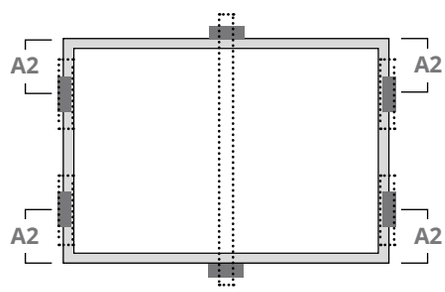

Use four clamps on the short side and two clamps on the long side. An additional support bar should be placed below the center of the module.

A2 range = (170 – 210) mm
Maximum Load:
Uplift load ≤ 2400 Pa
Downforce load ≤ 5400 Pa

EN-Rev IM/GN-AM-EU/1.8 Copyright © September, 2019. Canadian Solar Inc.

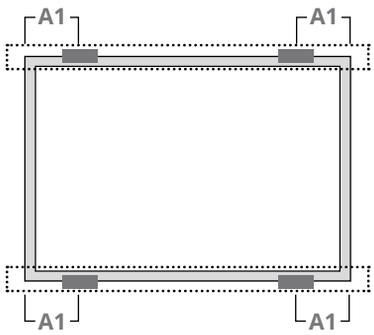

Use four clamps on the long side. Mounting rails run parallel to the long side frame.

A1 range = (240 – 330) mm
Maximum Load:
Uplift load ≤ 2400 Pa
Downforce load ≤ 4000 Pa

CS1VL-MS

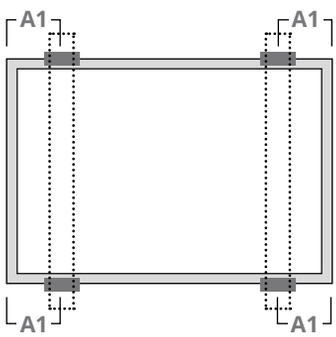

Use four clamps on the long side. Mounting rails run perpendicularly to the long side frame.

A1 range = (0 – 219) mm
Maximum Load:
Uplift load ≤ 2000 Pa
Downforce load ≤ 2000 Pa

A1 range = (220– 440) mm
Maximum Load:
Uplift load ≤ 2400 Pa
Downforce load ≤ 2400 Pa

A1 range = (270 – 330) mm
Maximum Load:
Uplift load ≤ 2400 Pa
Downforce load ≤ 5400 Pa

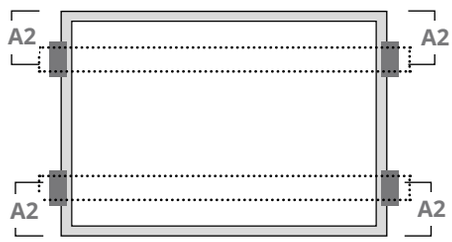

Use four clamps on the short side. Mounting rails run parallel to the long side frame.

A2 range = (200 – 250) mm
Maximum Load:
Uplift load ≤ 2400 Pa
Downforce load ≤ 2400 Pa

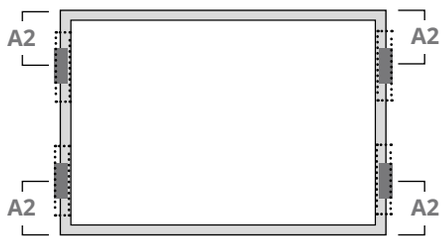

Use four clamps on the short side.

A2 range = (0 – 250) mm
Maximum Load:
Uplift load ≤ 2400 Pa
Downforce load ≤ 2400 Pa

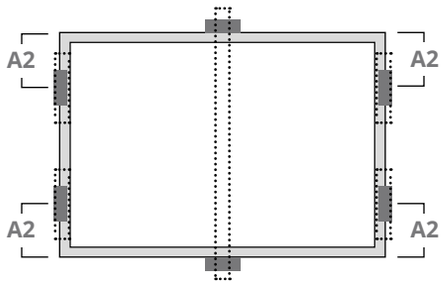

Use four clamps on the short side and two clamps on the long side. An additional support bar should be placed below the center of the module.

A2 range = (200 – 250) mm
Maximum Load:
Uplift load ≤ 2400 Pa
Downforce load ≤ 5400 Pa

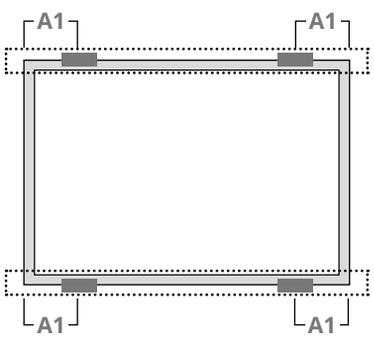

Use four clamps on the long side. Mounting rails run parallel to the long side frame.

A1 range = (270 –330) mm
Maximum Load:
Uplift load ≤ 2400 Pa
Downforce load ≤ 4000 Pa

MOUNTING METHOD B: INSERTION SYSTEMS

- The mounting method has been qualified by Canadian Solar Inc. as well as certified by VDE and CSA.

- Insertion methods can vary and depend on the mounting structures. The installer needs to follow the mounting guidelines recommended by the mounting system supplier. Each module must be securely maintained through all its length on two opposite sides. Install and tighten the insertion profiles to the support structure using the hardware and instructions provided by the mounting system manufacturer. The system designer and installer are solely responsible for load calculations and for the proper design of support structure.

- Canadian Solar Inc. warranty may be void in cases where improper insertion systems or unsuitable installation methods are found. When installing insertion profiles, please take the following measures into account:

1. Do not bend the module frame.
2. Do not touch the front glass or cast shadow onto it.
3. Do not damage the surface of the frame.
4. Ensure that the insertion profiles overlap the module frame by at least 10 mm (0.39 in).
5. Ensure that the module frame (C-shape) overlaps the insertion profiles by at least 15 mm (0.59 in).
6. Ensure insertion profile thickness and tolerances suit module thickness.

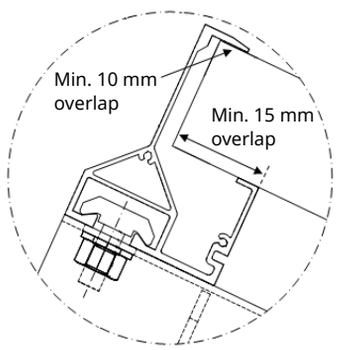

CS3U-P, CS3U-MS, CS6U-P and CS6U-M

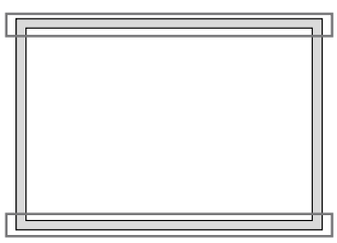

Use two insertion profiles running parallel to the long side frame.

Maximum Load:
Uplift load ≤ 2400 Pa
Downforce load ≤ 5400 Pa

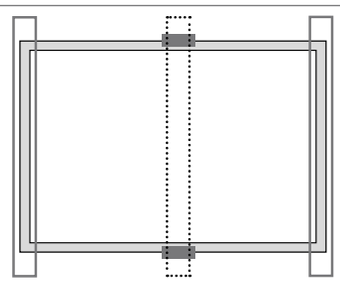

Use two insertion profiles running perpendicularly to the long side frame. An additional support bar should be placed below the module. Use two clamps on the support bar.

Maximum Load:
Uplift load ≤ 2400 Pa
Downforce load ≤ 5400 Pa

CS3K-P, CS3K-MS, CS6K-P, CS6K-M, CS6K-MS, CS6V-P, CS6V-M and CS6V-MS

Use two insertion profiles running parallel to the long side frame.

Maximum Load:
Uplift load ≤ 2400 Pa
Downforce load ≤ 4000 Pa

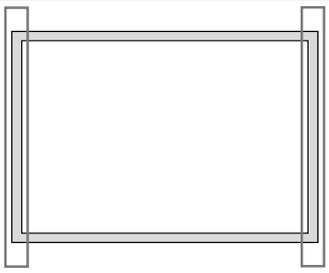

Use two insertion profiles running perpendicularly to the long side frame.

Maximum Load:
Uplift load ≤ 2000 Pa
Downforce load ≤ 2000 Pa

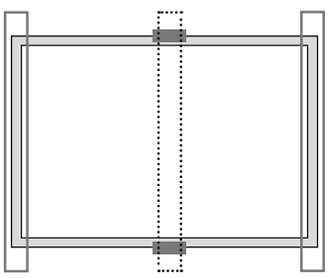

Use two insertion profiles running perpendicularly to the long side frame. An additional support bar should be placed below the module. Use two clamps on the support bar.

Maximum Load:
Uplift load ≤ 2400 Pa
Downforce load ≤ 5400 Pa

CS6A-P, CS6A-M, CS6VL-MS and CS6A-MS

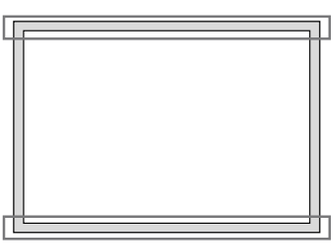

Use two insertion profiles running parallel to the long side frame.

Maximum Load:
Uplift load ≤ 2400 Pa
Downforce load ≤ 4000 Pa

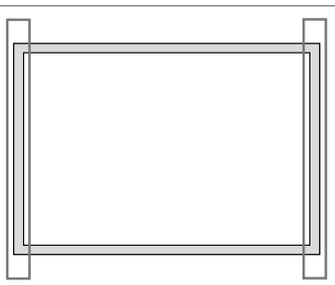

Use two insertion profiles running perpendicularly to the long side frame.

Maximum Load:
Uplift load ≤ 2400 Pa
Downforce load ≤ 2400 Pa

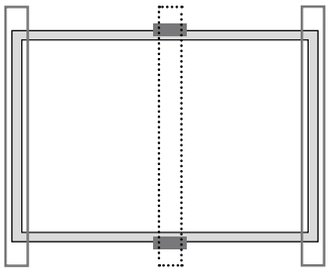

Use two insertion profiles running perpendicularly to the long side frame. An additional support bar should be placed below the module. Use two clamps on the support bar.

Maximum Load:
Uplift load ≤ 2400 Pa
Downforce load ≤ 5400 Pa

CS1K-MS, CS1H-MS

Use two insertion profiles running parallel to the long side frame.

Maximum Load:
Uplift load ≤ 2400 Pa
Downforce load ≤ 2400 Pa

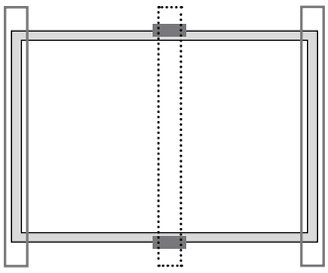

Use two insertion profiles running perpendicularly to the long side frame. An additional support bar should be placed below the module. Use two clamps on the support bar.

Maximum Load:
Uplift load ≤ 2400 Pa
Downforce load ≤ 5400 Pa

CS1V-MS, CS1VL-MS

Use two insertion profiles running parallel to the long side frame.

Maximum Load:
Uplift load ≤ 2400 Pa
Downforce load ≤ 4000 Pa

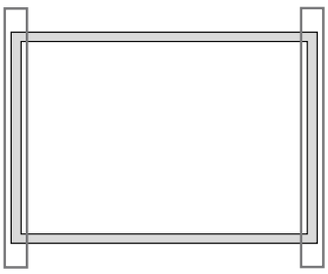

Use two insertion profiles running perpendicularly to the long side frame.

Maximum Load:
Uplift load ≤ 2000 Pa
Downforce load ≤ 2000 Pa

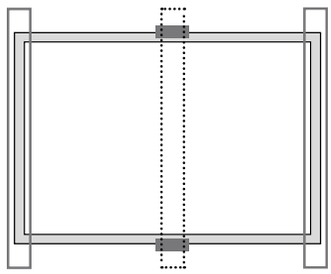

Use two insertion profiles running perpendicularly to the long side frame. An additional support bar should be placed below the module. Use two clamps on the support bar.

Maximum Load:
Uplift load ≤ 2400 Pa
Downforce load ≤ 5400 Pa

MOUNTING METHOD C: MOUNTING METHODS WITH (SINGLE-AXIS TRACKER)

- Canadian Solar Inc. modules can be mounted on single-axis trackers using center clamps or mounting holes as described below. All the requirements of the standard module installation manual and specific tracker detailed installation instructions should apply.

- The following tracker manufacturers and types are approved with Canadian Solar modules.

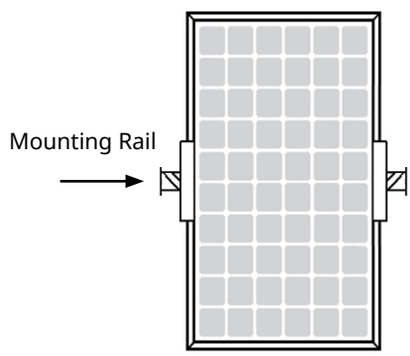

Module Type	Compatible Tracker	Mounting Hardware	Maximum Load (Pa)	Reference Manual (Version No.)
CS3U-P, CS3U-MS, CS6U-P, CS6U-M and CS3W-P	ATI DuraTrack™HZ Tracking System(V3)	Clamp Ear (V3)	Uplift load ≤ 2400 Pa Downforce load ≤ 2400 Pa	DuraTrack™HZ Solar Tracker Installation Guide (January 2017, Rev. B-01)
CS3U-P, CS3U-MS, CS6U-P and CS6U-M	NEXTracker NX Horizon	400 mm Short Rail (mounting holes)	Uplift load ≤ 2400 Pa Downforce load ≤ 2400 Pa	NEXTracker NX Horizon 2.3.1 Installation Manual (PDM-000149 Rev. B)
CS3W-P	NEXTracker NX Horizon	V2.3 Top Clamp Rails Rail part No: 20899, 20934, 20907	2000 Pa < Uplift load ≤ 2400 Pa 2000 Pa < Downforce load ≤ 2400 Pa	NEXTracker NX Horizon 2.3.1 Installation Manual (PDM-000149 Rev. B)
		V2.3 standard Rail (400 mm mounting holes) with larger bobtail	1600 Pa < Uplift load ≤ 2000 Pa 1600 Pa < Downforce load ≤ 2000 Pa	
		V2.3 standard Rail (400 mm mounting holes) with standard bobtail	Uplift load ≤ 1600 Pa Downforce load ≤ 1600 Pa	
CS3U-P, CS3U-MS, CS6U-P and CS6U-M	NEXTracker NX Horizon	V2.3 Top Clamp Rails Rail part No: 20899, 20942, 20908	Uplift load ≤ 2400 Pa Downforce load ≤ 2400 Pa	NEXTracker NX Horizon 2.3.1 Installation Manual (PDM-000149 Rev. B)

CS3U-P	Arctech single-axis tracker Portrait two rows	3438 mm rail (bolting method / M8 bolt + M8 plain washer (O.D. = 24 mm) / 1155 mm holes position) Rail drawing No: CS2018002	Uplift load ≤ 2400 Pa Downforce load ≤ 2400 Pa	SSMFIM-rev01 (SkySmart-Module Fixing Installation Manual)
CS3W-P	Arctech single-axis tracker Portrait two rows	3588 mm rail (bolting method / M8 bolt + M8 plain washer (O.D. = 24 mm) / 1155 mm holes position) Rail drawing No: CS2018007	Uplift load ≤ 2400 Pa Downforce load ≤ 2400 Pa	SSMFIM-rev01 (SkySmart-Module Fixing Installation Manual)
CS3U-P	Soltec SF7 Single-Axis Tracker	2454 mm rail (Bolting method / M6 bolt + M6 plain washer (O.D.= 18 mm) / 1300 mm + 400 mm holes position) Rail drawing No: SF7-MR-04-101_Dr_P00 SF7-MR-06-102_Dr_P00	Uplift load ≤ 1800 Pa Downforce load ≤ 1800 Pa	SF7QG-1500V-en, revision 1.0
CS3W-P	Soltec SF7 Single-Axis Tracker	2542 mm rail (Bolting method / M6 bolt + M6 plain washer (O.D. = 18 mm) / 1300 mm + 400 mm holes position) Rail drawing No: SF7-MR-04-018_Dr	Uplift load ≤ 1200 Pa Downforce load ≤ 1200 Pa	SF7QG-1500V-en, revision 1.0
CS3U-P	Soltec SF7 Single-Axis Tracker	long rail (bolting method / M8 bolt + M8 plain washer (O.D. = 24 mm) / 1155 mm holes position)	Uplift load ≤ 2400 Pa Downforce load ≤ 2400 Pa	SF7QG-1500V-en, revision 1.0
CS3W-P	Soltec SF7 Single-Axis Tracker	3297 mm rail (bolting method / M8 bolt + M8 plain washer (O.D. = 24 mm) / 1155 mm holes position) Rail drawing No: SF7-MR-04-017_Dr	Uplift load ≤ 2400 Pa Downforce load ≤ 2400 Pa	SF7QG-1500V-en, revision 1.0

- The allowable maximum twist angle of the module is 0.5 degree.
- For any single axis tracker installation method with portrait one row, bearing house cannot be allowed to locate under CS3W-P, please put bearing house between modules.
- Please contact the tracker manufacturer and Canadian Solar Inc.'s technical support department for details in regard to specific projects.

ANNEX B: ALTERNATIVE GROUNDING METHODS

Canadian Solar modules can be grounded using third party grounding devices as described below. The grounding methods are certified by CSA according to UL 1703. All the basic requirements of the main installation manual should apply to the alternative grounding methods. For detailed grounding instructions, please refer to related third party installation manuals.

Company	Grounding hardware	Compatible Mounting System	Reference Manual (Version No.)
Variety	Lay-in-Lug + Star Washer (UL 2703 & UL 467 certified)	Variety	Related reference installation manual
Schletter GmbH	Schletter Rapid2+ Grounding Clamps	Schletter Rapid2+	Schletter Rapid2+ Clamp installation instructions
Array Technologies Inc.	Grounding Strip	ATI Duratrack HZ Solar Tracker (V3)	DuraTrack™HZ Solar Tracker Installation Guide (January 2017, Rev. B-01)
IronRidge Inc.	grounding mid clamps (integrated grounding)	standard (XRS) and light (XRL) rails	Standard (XRS) and Light (XRL) Rails with Integrated Grounding Installation Manual (2013 Edition v1.13)
DYNORAXX Inc.	DynoRaxx® DynoBond spring clips	-----	DynoRaxx® DynoBond Installation Manual (publication no 090413)
RBI Solar Inc.	Raised Zee purlin integrated with pre-punched grounding holes	RBI Solar Ground Mount System Model GM-I	Ground Mount System Model GM-I Module Installation Manual (14 April 2014, version 21)
Quick Rack PV Inc.	Clamp integrated with grounding pins	Quick Rack Rail-Free Mounting System	Quick Rack Rail-Free Mounting System for Composition/Asphalt Shingle Roofs Installation Manual (May 2014, Rev F)
Cantsink Mfg Inc.	1/4" serrated flange bolt & serrated flange nut	Brilliant Rack Ground Mount System	Brilliant Rack Ground Mount System Installation Manual (Revision 12/05/2014)
Everest Solar Systems, LLC	WEEB-KMC Clips	Crossrail 36, Crossrail 48 And Crossrail 80 Mounting Systems	WEEB Installation Instructions For Everest Solar Crossrail 36, Crossrail 48 And Crossrail 80 Mounting Systems Only (50015303 Rev H)
Unirac Inc.	Mid clamp retention teeth	SOLAR MOUNT (SM)	Solar Mount Installation Guide (Revision PUB15MAR02)
Sunlink Inc.	Center Clamps & End Clamps with pre-punched teeth	Ballasted Ground Mount System and Core Roof Mount System	Assembly Instructions for Core RMS (Rev 03-14-2014) and Assembly Instructions for Ballasted GMS (Rev 02/02/2014)
Roof Tech Inc.	Bonding Plate	RT-[E] Mount E Mount AIR	RT-[E] Mount E Mount AIR Installation Manual (March 2015)
NEXTracker Inc.	1/4-in collar and 1/4-in pin	NX Horizon 2.2.1	NEXTracker NX Horizon 2.2.1 Short Rail Installation Manual (PDM-000103 Rev.)
BURNDY LLC.	WEEB-UIR	RBI Solar Groundmount	WEEB Installation Instructions For RBI Solar Groundmount Only (104-0404-000074-003)

ANNEX C: MECHANICAL AND ELECTRICAL RATINGS

Standard Test Conditions are: Irradiance of 1000 W/m², AM1.5 spectrum, and cell temperature of 25°C. The electrical characteristics are respectively within ±10% or [0; +5 W] of the indicated values for Isc, Voc and Pmax. Specifications are subject to change without notice.

Table C: Mechanical And Electrical Ratings under STC

Module Type	Maximum Power Pmax <W>	Operating voltage Vmp <V>	Operating current Imp <A>	Open Circuit Voltage Voc <V>	Short Circuit Current Isc <A>	Max. Series Fuse Rating <A>	Overall Dimension <mm>	Weight <kg>
CS6A-195M	195	24.2	8.04	29.9	8.56	15.00	1324 x 984 x 40 (52.1 × 38.7 × 1.57 in)	15.5 (34.2 lbs)
CS6A-200M	200	24.3	8.22	30.0	8.74	15.00		
CS6A-205M	205	24.5	8.38	30.2	8.90	15.00		
CS6A-210M	210	24.6	8.54	30.3	9.06	15.00		
CS6A-215M	215	24.7	8.70	30.4	9.22	15.00		
CS6A-220M	220	24.8	8.87	30.6	9.31	15.00		
CS6A-205MS	205	24.5	8.37	30.6	9.21	15.00		
CS6A-210MS	210	24.7	8.50	30.8	9.29	15.00		
CS6A-215MS	215	24.9	8.63	31.0	9.37	15.00		
CS6A-220MS	220	25.1	8.76	31.2	9.45	15.00		
CS6A-225MS	225	25.3	8.91	31.4	9.53	15.00		
CS6A-230MS	230	25.5	9.02	31.6	9.61	15.00		
CS6A-235MS	235	25.7	9.14	31.8	9.68	15.00		
CS6A-240MS	240	25.9	9.27	32.0	9.76	15.00		
CS6A-245MS	245	26.1	9.39	32.2	9.84	15.00		
CS6A-195P	195	24.0	8.13	29.6	8.69	15.00	1324 x 984 x 40 (52.1 × 38.7 × 1.57 in)	15.5 (34.2 lbs)
CS6A-200P	200	24.1	8.30	29.8	8.87	15.00		
CS6A-205P	205	24.2	8.47	29.9	9.03	15.00		
CS6A-210P	210	24.3	8.63	30.0	9.19	15.00		
CS6A-215P	215	24.5	8.78	30.2	9.35	15.00		
CS6A-220P	220	24.6	8.95	30.4	9.45	15.00		
CS6V-200M	200	25.2	7.95	31.1	8.46	15.00	1638 × 826 × 40 (64.5 × 32.5 × 1.57 in)	16.0 (35.3 lbs)
CS6V-205M	205	25.3	8.11	31.2	8.63	15.00		
CS6V-210M	210	25.4	8.27	31.3	8.79	15.00		
CS6V-215M	215	25.5	8.43	31.5	8.94	15.00		
CS6V-220M	220	25.7	8.56	31.6	9.08	15.00		
CS6V-225M	225	26.0	8.67	31.8	9.19	15.00		
CS6V-230M	230	26.1	8.81	31.9	9.33	15.00		
CS6V-235M	235	26.4	8.91	32.1	9.45	15.00		
CS6V-240M	240	26.7	9.00	32.2	9.55	15.00		
CS6V-245M	245	27.0	9.09	32.4	9.66	15.00		
CS6V-210MS	210	25.4	8.27	31.5	9.19	15.00		
CS6V-215MS	215	25.6	8.40	31.7	9.27	15.00		
CS6V-220MS	220	25.8	8.53	31.9	9.35	15.00		
CS6V-225MS	225	26.0	8.66	32.1	9.43	15.00		
CS6V-230MS	230	26.2	8.78	32.3	9.51	15.00		
CS6V-235MS	235	26.4	8.91	32.5	9.59	15.00		
CS6V-240MS	240	26.6	9.03	32.7	9.67	15.00		
CS6V-245MS	245	26.8	9.15	32.9	9.75	15.00		
CS6V-250MS	250	27.0	9.26	33.1	9.83	15.00		

Module Type	Maximum Power Pmax <W>	Operating voltage Vmp <V>	Operating current Imp <A>	Open Circuit Voltage Voc <V>	Short Circuit Current Isc <A>	Max. Series Fuse Rating <A>	Overall Dimension <mm>	Weight <kg>
CS6V-255MS	255	27.2	9.38	33.3	9.91	15.00		
CS6VH-115MS	115	13.1	8.78	16.2	9.59	15.00	844 × 826 × 40 (33.2 x 32.5 x 1.57 in)	9.0 (19.8 lbs)
CS6VH-120MS	120	13.3	9.03	16.4	9.67	15.00		
CS6VH-125MS	125	13.5	9.26	16.6	9.75	15.00		
CS6VL-150MS	150	19.5	7.7	24.6	9.11	15.00	1322 × 826 × 40 (52.05 x 32.5 x 1.57 in)	12.6 (27.8 lbs)
CS6VL-155MS	155	19.7	7.87	24.8	9.19	15.00		
CS6VL-160MS	160	19.9	8.05	25	9.27	15.00		
CS6VL-165MS	165	20.1	8.21	25.2	9.35	15.00		
CS6VL-170MS	170	20.3	8.38	25.4	9.43	15.00		
CS6VL-175MS	175	20.5	8.54	25.6	9.51	15.00		
CS6VL-180MS	180	20.7	8.7	25.8	9.59	15.00		
CS6VL-185MS	185	20.9	8.86	26	9.67	15.00		
CS6VL-190MS	190	21.1	9.01	26.2	9.75	15.00		
CS6VL-195MS	195	21.3	9.16	26.4	9.83	15.00		
CS6VL-200MS	200	21.5	9.31	26.6	9.91	15.00		
CS6VL-205MS	205	21.7	9.45	26.8	9.99	15.00		
CS6VL-210MS	210	21.9	9.59	27.6	10.17	15.00		
CS6V-190P	190	24.6	7.73	30.6	8.28	15.00	1638 × 826 ×40 (64.5 × 32.5 × 1.57 in)	16.0 (35.3 lbs)
CS6V-195P	195	24.8	7.87	30.7	8.44	15.00		
CS6V-200P	200	24.9	8.03	30.8	8.59	15.00		
CS6V-205P	205	25.0	8.19	30.9	8.76	15.00		
CS6V-210P	210	25.1	8.35	31.1	8.92	15.00		
CS6V-215P	215	25.3	8.51	31.2	9.07	15.00		
CS6V-220P	220	25.5	8.64	31.4	9.21	15.00		
CS6V-225P	225	25.7	8.75	31.6	9.32	15.00		
CS6V-230P	230	25.9	8.90	31.7	9.47	15.00		
CS6V-235P	235	26.1	8.99	31.8	9.58	15.00		
CS6K-240P	240	29.9	8.03	37.0	8.59	15.00	1650 x 992 x 40 / 35 (65.0 × 39.1 × 1.57 / 1.38 in)	18.2 (40.1 lbs)
CS6K-245P	245	30.0	8.17	37.1	8.74	15.00		
CS6K-250P	250	30.1	8.30	37.2	8.87	15.00		
CS6K-255P	255	30.2	8.43	37.4	9.00	15.00		
CS6K-260P	260	30.4	8.56	37.5	9.12	15.00		
CS6K-265P	265	30.6	8.66	37.7	9.23	15.00		
CS6K-270P	270	30.8	8.75	37.9	9.32	15.00		
CS6K-275P	275	31.0	8.88	38.0	9.45	15.00		
CS6K-280P	280	31.3	8.95	38.2	9.52	15.00		
CS6K-285P	285	31.4	9.06	38.3	9.64	15.00		
CS6K-290P	290	31.6	9.18	38.5	9.72	15.00		
CS6K-295P	295	31.8	9.28	38.6	9.81	15.00		
CS6K-300P	300	32.0	9.38	38.8	9.92	15.00		
CS6K-305P	305	32.1	9.50	38.9	10.03	15.00		
CS6K-310P	310	32.3	9.60	39.8	10.22	15.00		
CS6K-315P	315	32.5	9.70	40.0	10.32	15.00		
CS6K-320P	320	32.7	9.79	40.2	10.41	15.00		
CS6K-325P	325	32.9	9.88	40.4	10.50	15.00		
CS6K-330P	330	33.1	9.97	40.6	10.59	15.00		
CS6K-335P	335	33.3	10.07	40.8	10.69	15.00		

EN-Rev IM/GN-AM-EU/1.8 Copyright © September, 2019. Canadian Solar Inc.

Module Type	Maximum Power Pmax <W>	Operating voltage Vmp <V>	Operating current Imp <A>	Open Circuit Voltage Voc <V>	Short Circuit Current Isc <A>	Max. Series Fuse Rating <A>	Overall Dimension <mm>	Weight <kg>
CS6K-250M	250	30.4	8.22	37.5	8.74	15	1650 x 992 x 40 / 35 (65.0 × 39.1 × 1.57 / 1.38 in)	18.2 (40.1 lbs)
CS6K-255M	255	30.5	8.35	37.7	8.87	15		
CS6K-260M	260	30.7	8.48	37.8	8.99	15		
CS6K-265M	265	30.9	8.61	37.9	9.11	15		
CS6K-270M	270	31.1	8.67	38.2	9.19	15		
CS6K-275M	275	31.3	8.80	38.3	9.31	15		
CS6K-280M	280	31.5	8.89	38.5	9.43	15		
CS6K-285M	285	31.7	8.98	38.6	9.51	15		
CS6K-290M	290	31.9	9.09	38.7	9.59	15		
CS6K-255MS	255	30.7	8.31	37.9	9.11	15		
CS6K-260MS	260	30.9	8.42	38.1	9.19	15		
CS6K-265MS	265	31.1	8.53	38.3	9.27	15		
CS6K-270MS	270	31.3	8.63	38.5	9.35	15		
CS6K-275MS	275	31.5	8.74	38.7	9.43	15		
CS6K-280MS	280	31.7	8.84	38.9	9.51	15		
CS6K-285MS	285	31.9	8.94	39.1	9.59	15		
CS6K-290MS	290	32.1	9.05	39.3	9.67	15		
CS6K-295MS	295	32.3	9.14	39.5	9.75	15		
CS6K-300MS	300	32.5	9.24	39.7	9.83	15		
CS6K-305MS	305	32.7	9.33	39.9	9.91	15		
CS6K-310MS	310	32.9	9.43	40.1	9.99	15		
CS6K-315MS	315	33.1	9.52	40.3	10.07	15		
CS6K-320MS	320	33.3	9.61	41.3	10.18	15		
CS6K-325MS	325	33.5	9.71	41.5	10.28	15		
CS6K-330MS	330	33.7	9.80	41.7	10.37	15		
CS6K-335MS	335	33.9	9.89	41.9	10.46	15		
CS6U-290P	290	35.9	8.08	44.4	8.64	15	1960 × 992 × 40 / 35 (77.2 × 39.1 × 1.57 / 1.38 in)	22.4 (49.4 lbs)
CS6U-295P	295	36.0	8.19	44.5	8.76	15		
CS6U-300P	300	36.1	8.30	44.6	8.87	15		
CS6U-305P	305	36.3	8.41	44.8	8.97	15		
CS6U-310P	310	36.4	8.52	44.9	9.08	15		
CS6U-315P	315	36.6	8.61	45.1	9.18	15		
CS6U-320P	320	36.8	8.69	45.3	9.26	15		
CS6U-325P	325	37.0	8.78	45.5	9.34	15		
CS6U-330P	330	37.2	8.88	45.6	9.45	15		
CS6U-335P	335	37.4	8.96	45.8	9.54	15		
CS6U-340P	340	37.6	9.05	45.9	9.62	15		
CS6U-345P	345	37.8	9.13	46.0	9.69	15		
CS6U-350P	350	38.1	9.21	46.2	9.79	15		
CS6U-355P	355	38.2	9.30	46.4	9.84	15		
CS6U-360P	360	38.3	9.40	47.0	10.04	15		
CS6U-365P	365	38.5	9.49	47.2	10.13	15		
CS6U-370P	370	38.7	9.57	47.4	10.21	15		
CS6U-375P	375	38.9	9.65	47.6	10.29	15		
CS6U-380P	380	39.1	9.72	47.8	10.36	15		
CS6U-385P	385	39.3	9.80	48.0	10.44	15		
CS6U-390P	390	39.5	9.88	48.2	10.52	15		
CS6U-395P	395	39.7	9.95	48.4	10.59	15		
CS6U-400P	400	39.9	10.03	48.6	10.67	15		
CS6U-405P	405	40.1	10.10	48.8	10.74	15		

Module Type	Maximum Power Pmax <W>	Operating voltage Vmp <V>	Operating current Imp <A>	Open Circuit Voltage Voc <V>	Short Circuit Current Isc <A>	Max. Series Fuse Rating <A>	Overall Dimension <mm>	Weight <kg>
CS6U-290M	290	36.3	8.00	44.7	8.51	15	1960 × 992 × 40 / 35 (77.2 × 39.1 × 1.57 / 1.38 in)	22.4 (49.4 lbs)
CS6U-295M	295	36.4	8.11	44.9	8.63	15		
CS6U-300M	300	36.5	8.22	45	8.74	15		
CS6U-305M	305	36.6	8.33	45.2	8.84	15		
CS6U-310M	310	36.7	8.44	45.3	8.95	15		
CS6U-315M	315	36.9	8.53	45.5	9.04	15		
CS6U-320M	320	37.2	8.61	45.6	9.13	15		
CS6U-325M	325	37.4	8.69	45.8	9.21	15		
CS6U-330M	330	37.5	8.8	45.9	9.31	15		
CS6U-335M	335	37.8	8.87	46.1	9.41	15		
CS6U-340M	340	37.9	8.97	46.2	9.48	15		
CS6U-345M	345	38.1	9.06	46.4	9.56	15		
CS6U-350M	350	38.3	9.14	46.6	9.67	15		
CS3U-350MS	350	38.8	9.03	46.6	9.53	30	2000 × 992 × 40 / 35 (78.7 × 39.1 × 1.57 / 1.38 in)	22.6 / 22.5 (49.8 / 49.6 lbs)
CS3U-355MS	355	39	9.11	46.8	9.61	30		
CS3U-360MS	360	39.2	9.19	47	9.69	30		
CS3U-365MS	365	39.4	9.27	47.2	9.77	30		
CS3U-370MS	370	39.6	9.35	47.4	9.85	30		
CS3U-375MS	375	39.8	9.43	47.6	9.93	30		
CS3U-380MS	380	40	9.5	47.8	10.01	30		
CS3U-385MS	385	40.2	9.58	48	10.09	30		
CS3U-390MS	390	40.4	9.66	48.2	10.17	30		
CS3U-395MS	395	40.6	9.73	48.4	10.25	30		
CS3U-400MS	400	40.8	9.81	48.6	10.33	30		
CS3U-405MS	405	41.0	9.88	49.3	10.44	30		
CS3U-410MS	410	41.2	9.96	49.5	10.52	30		
CS3U-310P	310	37.2	8.34	44.7	8.88	30	2000 × 992 × 40 / 35 (78.7 × 39.1 × 1.57 / 1.38 in)	22.6 / 22.5 (49.8 / 49.6 lbs)
CS3U-315P	315	37.4	8.43	44.9	8.96	30		
CS3U-320P	320	37.6	8.52	45.1	9.04	30		
CS3U-325P	325	37.8	8.6	45.3	9.12	30		
CS3U-330P	330	38	8.69	45.5	9.2	30		
CS3U-335P	335	38.2	8.77	45.7	9.28	30		
CS3U-340P	340	38.4	8.86	45.9	9.36	30		
CS3U-345P	345	38.6	8.94	46.1	9.44	30		
CS3U-350P	350	39.2	8.94	46.6	9.51	30		
CS3U-355P	355	39.4	9.02	46.8	9.59	30		
CS3U-360P	360	39.6	9.10	47.0	9.67	30		
CS3U-365P	365	39.8	9.18	47.2	9.75	30		
CS3U-370P	370	40.0	9.26	47.4	9.83	30		
CS3U-375P	375	40.2	9.34	47.6	9.91	30		
CS3U-380P	380	40.4	9.42	47.8	9.99	30		
CS3U-385P	385	40.6	9.50	48.0	10.07	30		
CS3U-390P	390	40.8	9.56	48.6	10.17	30		
CS3U-395P	395	41.0	9.64	48.8	10.24	30		
CS3U-400P	400	41.2	9.71	49.0	10.30	30		
CS3U-405P	405	41.4	9.79	49.2	10.37	30		
CS3U-410P	410	41.6	9.86	49.4	10.43	30		
CS3U-415P	415	41.8	9.93	49.6	10.49	30		
CS3U-420P	420	42.0	10.00	49.8	10.55	30		

EN-Rev IM/GN-AM-EU/1.8 Copyright © September, 2019. Canadian Solar Inc.

Module Type	Maximum Power Pmax <W>	Operating voltage Vmp <V>	Operating current Imp <A>	Open Circuit Voltage Voc <V>	Short Circuit Current Isc <A>	Max. Series Fuse Rating <A>	Overall Dimension <mm>	Weight <kg>
CS3K-280MS	280	31.7	8.84	38.5	9.49	30	1675 x 992 x 40 / 35 (65.9 × 39.1 × 1.57 / 1.38 in)	18.5 (40.8 lbs)
CS3K-285MS	285	31.9	8.94	38.7	9.57	30		
CS3K-290MS	290	32.1	9.04	38.9	9.65	30		
CS3K-295MS	295	32.3	9.14	39.1	9.73	30		
CS3K-300MS	300	32.5	9.24	39.3	9.82	30		
CS3K-305MS	305	32.7	9.33	39.5	9.9	30		
CS3K-310MS	310	32.9	9.43	39.7	9.98	30		
CS3K-315MS	315	33.1	9.52	39.9	10.06	30		
CS3K-320MS	320	33.3	9.61	40.1	10.14	30		
CS3K-325MS	325	33.5	9.71	40.3	10.22	30		
CS3K-330MS	330	33.7	9.8	40.5	10.3	30		
CS3K-250P	250	30	8.34	36.7	8.98	30	1675 x 992 x 40 / 35 (65.9 × 39.1 × 1.57 / 1.38 in)	18.5 (40.8 lbs)
CS3K-255P	255	30.2	8.45	36.9	9.06	30		
CS3K-260P	260	30.4	8.56	37.1	9.14	30		
CS3K-265P	265	30.6	8.66	37.3	9.22	30		
CS3K-270P	270	30.8	8.77	37.5	9.3	30		
CS3K-275P	275	31	8.88	37.7	9.38	30		
CS3K-280P	280	31.2	8.98	37.9	9.47	30		
CS3K-285P	285	31.4	9.08	38.1	9.56	30		
CS3K-290P	290	32.3	8.98	38.9	9.49	30		
CS3K-295P	295	32.5	9.08	39.1	9.57	30		
CS3K-300P	300	32.7	9.18	39.3	9.65	30		
CS3K-305P	305	32.9	9.28	39.5	9.73	30		
CS3K-310P	310	33.1	9.37	39.7	9.81	30		
CS3K-315P	315	33.3	9.46	39.9	9.89	30		
CS3K-320P	320	33.5	9.56	40.1	9.97	30		
CS3K-325P	325	33.7	9.65	40.9	10.21	30		
CS3K-330P	330	33.9	9.74	41.1	10.29	30		
CS3K-335P	335	34.1	9.83	41.3	10.37	30		
CS3K-340P	340	34.3	9.92	41.5	10.45	30		
CS3K-345P	345	34.5	10.00	41.7	10.52	30		
CS3K-350P	350	34.7	10.09	41.9	10.60	30		
CS1V-240MS	240	28.3	8.48	34.7	9.15	15	1638x826x40 (64.5 x 32.5 x 1.57 in)	15.4 (34.0 lbs)
CS1V-245MS	245	28.6	8.58	34.9	9.22	15		
CS1V-250MS	250	28.8	8.68	35.1	9.29	15		
CS1V-255MS	255	29.0	8.79	35.3	9.37	15		
CS1V-260MS	260	29.2	8.89	35.5	9.44	15		
CS1V-265MS	265	29.4	9.00	35.7	9.51	15		
CS1V-270MS	270	29.6	9.11	35.9	9.59	15		
CS1V-275MS	275	29.8	9.22	36.1	9.66	15		
CS1V-280MS	280	30.0	9.33	36.3	9.74	15		
CS1V-285MS	285	30.2	9.44	36.5	9.82	15		
CS1VL-190MS	190	22.5	8.45	27.6	9.10	15	1322×826×35 (52.05 x 32.5 x 1.38 in)	12.6 (27.8 lbs)
CS1VL-195MS	195	22.7	8.58	27.8	9.22	15		
CS1VL-200MS	200	22.9	8.73	28.0	9.34	15		

Module Type	Maximum Power Pmax <W>	Operating voltage Vmp <V>	Operating current Imp <A>	Open Circuit Voltage Voc <V>	Short Circuit Current Isc <A>	Max. Series Fuse Rating <A>	Overall Dimension <mm>	Weight <kg>
CS1VL-205MS	205	23.1	8.88	28.2	9.46	15		
CS1VL-210MS	210	23.3	9.01	28.4	9.58	15		
CS1VL-215MS	215	23.5	9.15	28.6	9.70	15		
CS1VL-220MS	220	23.7	9.28	28.8	9.82	15		
CS1VL-225MS	225	23.9	9.41	29.0	9.97	15		
CS1K-310MS	310	35.2	8.82	43.1	9.37	20	1675x992x35 (65.9 x 39.1 x 1.38 in)	18.5 (40.8 lbs)
CS1K-315MS	315	35.4	8.91	43.2	9.44	20		
CS1K-320MS	320	35.6	9.00	43.3	9.51	20		
CS1K-325MS	325	35.8	9.09	43.4	9.58	20		
CS1K-330MS	330	36.0	9.18	43.5	9.65	20		
CS1K-335MS	335	36.2	9.27	43.6	9.73	20		
CS1K-340MS	340	36.4	9.35	43.7	9.81	20		
CS1K-345MS	345	36.6	9.43	43.8	9.88	20		
CS1K-350MS	350	36.8	9.51	43.9	9.95	20		
CS1K-355MS	355	37.0	9.60	44.0	10.02	20		
CS1H-325MS	325	36.6	8.88	44.1	9.45	15	1700x992x35 (66.9 x 39.1 x 1.38 in)	19.2 (42.3 lbs)
CS1H-330MS	330	37.0	8.92	44.2	9.49	15		
CS1H-335MS	335	37.4	8.96	44.3	9.53	15		
CS1H-340MS	340	37.8	9.00	44.5	9.57	15		
CS1H-345MS	345	38.2	9.04	44.6	9.61	15		
CS1U-385MS	385	43.5	8.86	53.1	9.45	15	2078x992x35 (81.8 x 39.1 x 1.38 in)	23.4 (51.6 lbs)
CS1U-390MS	390	43.7	8.93	53.2	9.50	15		
CS1U-395MS	395	43.9	9.01	53.3	9.55	15		
CS1U-400MS	400	44.1	9.08	53.4	9.60	15		
CS1U-405MS	405	44.3	9.16	53.5	9.65	15		
CS1U-410MS	410	44.5	9.23	53.6	9.70	15		
CS1U-415MS	415	44.7	9.30	53.7	9.75	15		
CS1U-420MS	420	44.9	9.37	53.8	9.80	15		
CS1U-425MS	425	45.1	9.44	53.9	9.85	15		
CS1U-430MS	430	45.3	9.51	54.0	9.90	15		
CS3W-385P	385	38.1	10.11	46.6	10.66	20	2108 x 1048 x 40 (83.0 x 41.3 x 1.57 in)	24.9 (54.9 lbs)
CS3W-390P	390	38.3	10.19	46.8	10.74	20		
CS3W-395P	395	38.5	10.26	47.0	10.82	20		
CS3W-400P	400	38.7	10.34	47.2	10.90	20		
CS3W-405P	405	38.9	10.42	47.4	10.98	20		
CS3W-410P	410	39.1	10.49	47.6	11.06	20		
CS3W-415P	415	39.3	10.56	47.8	11.14	20		
CS3W-420P	420	39.5	10.64	48.0	11.26	20		
CS3L-320P	320	31.8	10.07	38.8	10.66	20	1765 x 1048 x 40 (69.5 x 41.3 x 1.57 in)	20.6 (45.4 lbs)
CS3L-325P	325	32.0	10.16	39.0	10.74	20		
CS3L-330P	330	32.2	10.24	39.2	10.82	20		
CS3L-335P	335	32.4	10.34	39.4	10.90	20		
CS3L-340P	340	32.6	10.43	39.6	10.98	20		
CS3L-345P	345	32.8	10.52	39.8	11.06	20		

· The recommended maximum series fuse rating is stated in table C above.

EN-Rev IM/GN-AM-EU/1.8 Copyright © September, 2019. Canadian Solar Inc.

ANNEX D: MODULE CLEANING GUIDELINE

This manual covers requirements for the cleaning procedure of Canadian Solar Inc. photovoltaic modules. The purpose of these cleaning guidelines is to provide general information for cleaning Canadian Solar modules. Professional installers should read these guidelines carefully and strictly follow these instructions.

Failure to follow these instructions may result in death, injury or property damage to the photovoltaic module. Damages induced by inappropriate cleaning procedures will void Canadian Solar Inc. warranty.

SAFETY WARNING

- Cleaning activities create risk of damaging the modules and array components, as well as increasing the potential electric shock hazard.
- Cracked or broken modules represent an electric shock hazard due to leakage currents, and the risk of shock is increased when modules are wet. Before cleaning, thoroughly inspect modules for cracks, damage, and loose connections.
- The voltage and current present in an array during daylight hours are sufficient to cause a lethal electrical shock.
- **Do not** immerse the module, partially or totally, in water or any other cleaning solution.
- Ensure that the circuit is disconnected before starting the cleaning procedure as contact with leakage of electrically active parts can result in injury.
- Ensure that the array has been disconnected from other active components (such as inverter or combiner boxes) before starting with the cleaning.
- Wear suitable protection (clothes, insulated gloves, etc.).

HANDLING NOTICE

- Use a proper cleaning solution and suitable cleaning equipment.
- **Do not** use abrasive or electric cleaners on the module.
- Particular attention should be taken to avoid the module backsheet or frame to come in contact with sharp objects, as scratches may directly affect product safety.
- **Do not** use abrasive cleaners, de-greasers or any unauthorized chemical substance (e.g. oil, lubricant, pesticide, etc.) on the module.
- **Do not** use cleaning corrosive solutions containing hydrofluoric acid, alkali, acetone, or industrial alcohol. Only substances explicitly approved by Canadian Solar are allowed to be used for cleaning modules.
- Canadian Solar Inc. recommends to avoid rotating brush cleaning methods, as they could create micro-cracks in the PV modules.
- Dirt must never be scraped or rubbed away when dry, as this will cause micro-scratches on the glass surface.

OPERATION PREPARATION

- Noticeable dirt must be rubbed away by gentle cleaning-implement (soft cloth, sponge or brush with soft bristles).
- Ensure that brushes or agitating tools are not abrasive to glass, EPDM, silicone, aluminum, or steel.
- Conduct the cleaning activities avoiding the hottest hours of the day, in order to avoid thermal stress on the module.

We recommend the following to be used:
- Water with low mineral content
- Near neutral pH water
- The maximum water pressure recommended is 4 MPa (40 bar)

CLEANING METHODS

Method A: Compressed Air
Canadian Solar Inc. recommends cleaning the soft dirt (like dust) on modules just with compressed air. This technique can be applied as long as the method is efficient enough considering the existing conditions.

Method B: Wet cleaning
If excessive soiling is present on the module surface, a non-conductive brush, sponge, or other mild agitating method may be used with caution.

- Ensure that any brushes or agitating tools are constructed with non-conductive materials to minimize risk of electric shock and that they are not abrasive to the glass or the aluminum frame.

- If grease is present, an environmentally friendly cleaning agent may be used with caution.

AMENDED EDITIONS AND DATES

- Rev 1.6 was released in April, 2019.
- Rev 1.7 was released in August, 2019.
- Rev 1.8 was released in September, 2019.

CANADIAN SOLAR INC.
545 Speedvale Avenue West, Guelph, Ontario, Canada N1K 1E6
www.canadiansolar.com

EN-Rev IM/GN-AM-EU/1.8 Copyright © September, 2019. Canadian Solar Inc.